Drip Irrigation Workshop

Training Manual

Version 1

February 12, 2020
Houston, Texas

Conducted By The

Texas A&M School of Irrigation
Irrigation Technology Program
Texas A&M AgriLIFE Extension Service

Manual for the Drip Irrigation Workshop

Version 1

Biological and Agricultural Engineering
Texas AgriLIFE Extension Service
Texas A&M System
College Station, TX 77843-2117

http://Irrigation.tamu.edu

Table of Contents

Landscape Irrigation Design

Eugene W. Rochester

Landscape Irrigation Design

Eugene W. Rochester
Auburn University
Auburn, Alabama

ASAE
The Society for engineering
in agricultural, food, and
biological systems

For information, contact:

ASAE
2950 Niles Road
St. Joseph, Michigan, USA 49085-9659
Phone: 616.429.0300
Fax: 616.429.3852
E-mail: hq@asae.org

ASAE Publication No. 8

Pamela DeVore-Hansen, Editor
William Thompson, Cover Design
Information Publishing Group

Alan P. Rochester, Illustrations

LCCN 95-075549
ISBN 0-929355-61-X

Manufactured in the United States of America.

Some Basic Concepts 2

There are some basic concepts relating to water and moving water through pipes that are particularly important to us as we start thinking about designing an irrigation system. First of all, water has weight, about 62.4 pounds per cubic foot (lb/ft^3) {1000 kg/m^3}. This weight exerts a force on its surroundings, for example, a pipe. We usually don't talk about force specifically, but the force per unit area or pressure (pounds per square inch, lb/in.^{2} or psi) {kPa, bars} is an important parameter in any irrigation design. When we turn on a faucet, water flows out because of pressure inside the pipe. This pressure is usually generated from a pump but could be generated just as easily from a reservoir located on a nearby mountain. Most municipal water supplies have pumps that supply water to an elevated tank for storage (fig. 2.1). Thus, our first concept:

A column of water causes pressure.

We can compute the relationship between the height of a column of water and the resulting pressure. We find that 2.31 ft of water provides 1 lb/in.^{2} and that 23.1 ft of water provides 10 lb/in.^{2}, thus, the relationship:

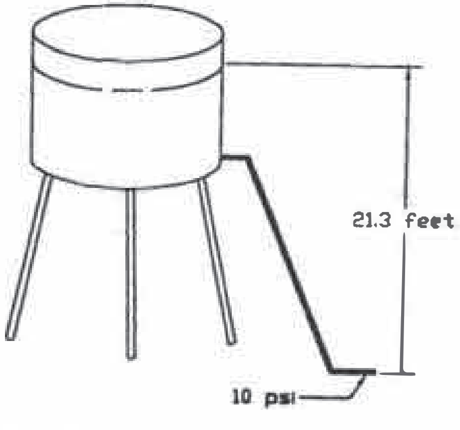

Figure 2.1. Water tank used for storage and pressure.

$$E = p\left(\frac{2.31\ \text{ft}}{1\ \text{lb/in.}^2}\right) \qquad 2.1$$

where E = elevation in ft
p = pressure in lb/in.^2

{In metric, 1 m of water provides 9.81 kPa pressure.
To convert pressure in kilopascals (kPa) to elevation in
meters (m), divide pressure in kPa by 9.81 kPa/m.}

Actually, the column doesn't have to be vertical and it usually isn't; if we want to compute the pressure at a point or the change in pressure between two points caused by elevation changes, all we need to know is the difference in elevation between the two points. Later in this chapter (see pg. 17) we will discuss other factors that will also affect water pressure such as friction caused by water moving through a pipe.

When we turn on a faucet, or an irrigation system, water begins to move through our piping system. We refer to the speed at which the water moves as velocity and its units are feet per second (ft/s) {m/s}. If we measured water velocity in a pipe, it would be greatest in the middle of the pipe, and least near the pipe walls. (However, that's not particularly important to our discussion.) So when we say velocity, we are really talking about the average velocity of water in the pipe. Related to velocity is another term "flow" sometimes called flow rate. Flow is a measure of the amount of water moved during a period of time and can be reported as gallons per minute (gal/min) {$\text{m}^3\text{/s}$ or L/s}. A unique relationship exists between the components in our second concept:

**There is a relationship between velocity, flow,
and pipe cross-sectional area.**

$$q = va \qquad 2.2$$

where q = flow
v = velocity
a = cross-sectional area

Perhaps now is a good time to talk about units in equations. The above equation doesn't have any constants to correct for units; its up to you to be sure everything is correct. For example, if you enter the pipe cross-sectional area in square feet (ft^2) and the velocity in feet per second (ft/s), the flow is the product of the two or cubic feet per second (ft^3/s). This is a perfectly good measure of flow but not the one we usually want (i.e., gal/min). To get gallons per minute we convert, knowing that there are 7.48 gal in 1 ft^3 and 60 s/min. (Appendix B provides this and other useful conversion factors.) An easier, but sometimes riskier way to obtain the units that we want is to introduce a constant into the equation so that we can enter and compute directly with the most convenient units. We could develop an equation where we enter the inside diameter (d) of the pipe in inches, the velocity (v) in ft/s, and compute the flow (q) in gal/min. Such an equation would be:

$$q = 2.45\, v d^2 \qquad 2.3$$

An even easier and surer way to determine flow and velocity is to look up the values in the friction-loss tables for the particular pipe that you are planning to use (see appendix C).

At any point in a piping system, water has energy associated with it. The energy can be in many forms including pressure, elevation, and velocity. The amount of energy associated with velocity is usually small compared to elevation and pressure, and will be ignored in our irrigation designs. If there isn't a pump in the piping system (which adds energy), energy remains the same at all points in the system when water isn't flowing (static conditions) and decreases in the down-stream direction when water is flowing (dynamic conditions). If consistent units are used, pressure and elevation can be added together to describe the amount of energy at a point:

$$H = p\left(\frac{2.31\ \text{ft}}{1\ \text{lb/in.}^2}\right) + E \qquad 2.4$$

where H = energy head (ft)
p = pressure ($lb/in.^2$)
E = elevation (ft)

{In metric units, energy head can be expressed in meters. Pressure (kPa) is converted to energy head in meters by dividing the pressure by 9.81 kPa/m.}

The elevation can be the height above or below any convenient point in the area so long as you use the same point (datum) for all your computations. Equation 2.4 again demonstrates that the units of pressure can be $lb/in.^2$ {kPa}, but can also be described in feet {m} of water. Equation 2.4 can also be used to compute the pressure at any point in a static piping system.

Example 2.1

For example (fig. 2.2), the pressure at the point of connection (POC) to an irrigation system is 50 lb/in.². A sprinkler head is located at another location which is 25 ft lower than the POC. What is the static water pressure at the sprinkler head?

For convenience, let's use the POC as the elevation datum. The total energy at the POC is then:

$$50\ \text{lb/in.}^2\left(\frac{2.31\ \text{ft}}{1\ \text{lb/in.}^2}\right) + 0 = 115.5\ \text{ft}$$

In this example, there is no water flowing, therefore, the energy at all points of the system is the same, and pressure at the sprinkler head is found by solving equation 2.4 for p and substituting a negative value for elevation since it is below the datum:

$$\begin{aligned} p &= (H - E)\left(\frac{1\ \text{lb/in.}^2}{2.31\ \text{ft}}\right) \\ &= (115.5\ \text{ft} + 25\ \text{ft})\left(\frac{1\ \text{lb/in.}^2}{2.31\ \text{ft}}\right) \\ &= 60.8\ \text{lb/in.}^2 \end{aligned}$$

You should get the same answer if you assume the sprinkler is the datum. Surprisingly, perhaps, you have more pressure at the sprinkler than you have at the POC. You can see that the increased pressure was obtained by decreasing elevation.

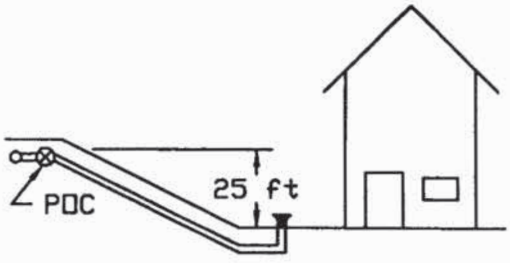

Figure 2.2. Pressure change caused by elevation.

Water flowing in a pipe loses energy because of friction between the water and the pipe and because of turbulence. In the above example, when the sprinkler head is operating, sprinkler pressure would be less than the 60.8 lb/in.^{2} due to friction loss in the pipe. We must be able to determine the amount of energy loss in pipes so that we can properly size them. The quick way is to look up losses due to friction in a table (appendix C), but beware, tables are developed from equations, and, unfortunately, some equations are more accurate than others. Many friction-loss tables are based on the Hazen-Williams equation, which provides usable results for most pipe sizes and water temperatures encountered in spray and sprinkler irrigation. A more accurate equation, Darcy-Weisbach, may be needed in trickle irrigation or when heated water is used. For most cases we can use the Hazen-Williams equation:

$$h_f = 0.2083\left[\frac{100}{C}\right]^{1.852}\frac{q^{1.852}}{d^{4.866}} \qquad 2.5$$

where h_f = loss due to friction (ft/100 ft)
q = flow (gal/min)
C = Hazen-Williams coefficient
d = pipe inside diameter (in.)

Notice that friction loss is a function of three factors: flow, q, pipe diameter, d, and pipe roughness, C. Actually, C is a measure of pipe smoothness with higher values assigned to smoother pipe. Plastic pipe, which is smoother than steel pipe, has a higher C value (150) compared to the C value (120) for steel. Copper has a C value of 140. Thus, increasing flow, or choosing a rougher pipe, will increase energy losses, causing decreased pressures downstream; while increasing inside diameter of the pipe, d, decreases losses and provides greater pressure downstream. The Hazen-Williams equation is used throughout this text.

Units in Irrigation Design

Most people in the United States are more familiar with English units, but much of the world uses metric units, and the U.S. is in the process of converting to metric. Metric units are simpler to use since divisions are in multiples of 10 rather than 12 as in 12 inches per foot compared to 100 centimeters per meter. But, there is variation in some units even among countries that use metric. Pressure is one variable that can be a problem. Depending upon the country, pressure may be reported in bars, kilopascals (kPa), or kilograms per square centimeter (kg/cm^2). Manufacturers in the United States are now providing metric tables, some are using bars for pressure, while others are using kPa.

Time is measured in seconds, minutes, and hours (not a convenient convention) worldwide. To simplify time, seconds are sometimes used as the basic unit and larger units of time are reported in kiloseconds (ks) or megaseconds (Ms) rather than hours or days. Most irrigation documents and texts, however, use hours or days for long time periods.

Distances are usually measured in meters (m), millimeters (mm) for small distances, or kilometers (km) for large distances. In metric, the prefixes are the key to size. A kilometer is 1,000 times larger than a meter, for example. Appendix B provides a review of prefixes as well as some useful conversions.

Some large dimensions have special names such as the measurement of larger areas in hectares. A hectare is 10 000 m^2. Large volumes are measured in cubic meters (m^3), but smaller volumes may be reported in liters (L). There are 1000 L in 1 m^3.

Chapter 2 Problems

2.1 A pressure of 33 $lb/in.^2$ is displayed on a pressure gage. Find the maximum height above the pressure gage that water would rise in a pipe.

2.2 The Grand Canyon is approximately 5,000 ft deep. Drinking and irrigation water are obtained from a stream located 2,000 ft below the rim of the canyon. What would be the water pressure at the canyon floor if the pressure is obtained by change in elevation only?

2.3 What would be the maximum flow in a pipe with a 1 in. inside diameter, if the maximum allowable velocity is 5 ft/s?

2.4 Find the difference in pressure caused by elevation for two sprinklers that are located at elevations 100 ft and 175 ft.

2.5 Use the tables in the appendices to find the pressure loss due to friction in a 2-in. schedule 40 PVC (plastic) pipe line that is 1,000 ft long if the flow is 55 gal/min. What is the total friction loss and average water velocity?

2.6 A 3-in. PVC pipe is conveying 110 gal/min over a distance of 750 ft. Determine the class or schedule pipe if the pressure loss is 6.4 lb/in.^{2}.

2.7 A 2-in. type M copper tube has a flow of 2 L/s. Find the pressure loss in kilopascals for a 10-m length. Also determine the velocity in meters per second.

2.8 Repeat problem 2.5 using the Hazen-Williams equation and the flow-velocity equation. Use the inside pipe diameter that is reported in the appendix tables.

Piping Systems 7

Many different types of pipe can be used in irrigation systems, but there are only two or three types found in most residential and commercial irrigation systems. *Polyvinylchloride* (PVC) and *polyethylene* (PE), both thermoplastics, are the materials of choice for most applications in sprinkler and drip systems. Copper pipe is sometimes used at the supply point for public water supplies. All three types of pipe are available in more than one wall thickness and each thickness has different pressure limitations. Thus, one characteristic that must be specified is the desired pressure rating of the pipe. Pipes with inadequate pressure ratings are subject to rupture, while pipes with excessive pressure ratings are more expensive and usually are more difficult to work with.

Pressure Rating Standards

The allowable design pressure of a pipe, called *rated pressure*, depends upon the type of material in the pipe and the pipe's diameter and wall thickness. Pipes are made according to industry standards. The two common methods of sizing thermoplastic pipes are called schedule and class. The *schedule rating method* is the older of the two and, unfortunately, the pipe pressure ratings change with pipe diameter. For example, a schedule 40 PVC pipe has a 450 lb/in.^{2} pressure rating for 1 in. pipe and a 220 lb/in.^{2} pressure rating for 4 in. pipe. One would need a table—or a good memory—to keep up with pressure ratings of schedule pipe.

The *class rating system* is an improvement over the schedule rating method: all diameters in the same class have the same pressure rating. For example, class 200 pipe has a 200 lb/in.^{2} pressure rating for all diameters. The class rating system is also referred to as SDR-PR pipe, meaning *standard dimension ratio-pressure rated. Dimension ratio* is defined as the ratio of the pipe diameter to its wall thickness. Holding this ratio constant for different diameters assures a constant pressure rating for the pipe. Manufacturers have selected various ratios to use in pipe production. These are referred to as *standard dimension ratios* (SDR).

Pipe Dimensions

The pressure rating of a pipe is changed by modifying its wall thickness. Therefore, when we refer to a pipe as 1 in., that's the nominal size, and its actual dimensions will vary according to the pressure rating. To change wall thickness, either maintain the inside diameter (ID) and allow the outside diameter (OD) to change or maintain the OD and allow the ID to change. These two methods are called *ID controlled* and *OD controlled*, respectively. Both iron pipe size (IPS) and plastic irrigation pipe (PIP) standards specify OD controlled pipes. PVC pipe is made according to both standards, but IPS is more common in residential, commercial, and golf course designs. Many polyethylene pipes are ID controlled.

Polyvinylchloride Pipe

Polyvinylchloride (PVC) pipe is a semi-rigid plastic pipe. It can be cut quickly with a hack saw or even quicker with a hand-held shear (fig. 7.1). Joints can be easily solvent welded (cemented) together (fig 7.2), connected by threads, or for larger diameter joints, connected with gasket couplings (fig. 7.3). Most pipe used in residential applications is solvent welded. Larger diameter pipes, 3 in. and greater, are usually connected with gasketed joints which require thrust blocks at all turns to keep the pipe system intact. ASAE (1993, S376.1) provides a detailed discussion of thermoplastic pipe system installations. Pipe sizes are available from 1/2 in. to greater than 18 in. in diameter.

Figure 7.1. Hand-held shears for cutting PVC pipe.

Figure 7.2. Primer and glue application on PVC pipe.

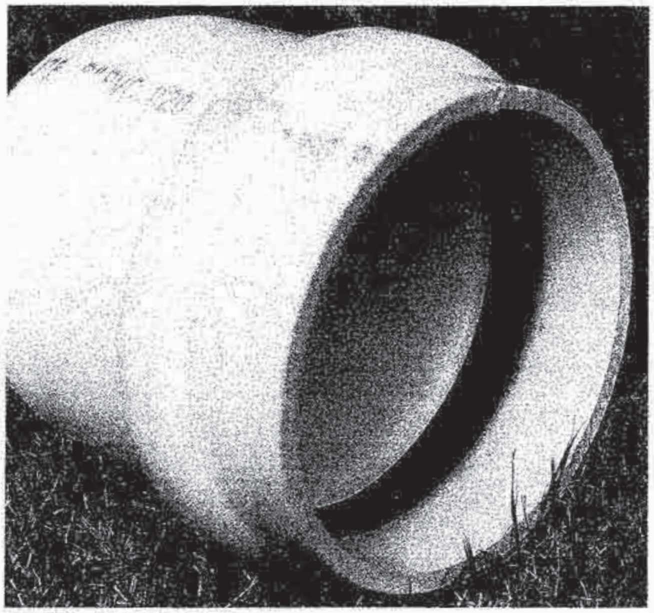

Figure 7.3. Gasket joined PVC pipe.

PVC pipe is available in a number of different pressure ratings specified according to class or schedule. Commonly used pipes are class 160 and 200 representing pressure ratings of 160 lb/in.^{2} and 200 lb/in.^{2}. Class 200 pipe or greater is generally recommended for pipelines which remain continuously under pressure. Class 160 is often used for pipelines which are pressurized only

Figure 7.4. PVC pipe with identification.

Table 7.1. Water pressure ratings at 73° F for schedule 40 PVC plastic pipe

Nominal Pipe Size (in.)	Pressure Ratings (lb/in.)
0.5	600
0.75	480
1	450
1.25	370
1.5	330
2	280
2.5	300
3	260
3.5	240
4	220
6	180
8	160

* Values for PVC1120, PVC1220, PVC2120. Other PVC types may have lower pressure ratings.

Source: *Annual book of ASTM standards*, vol. 08.04, section 8. 1988. ASTM standard D1785, table x1.1. Philadelphia, Pa.: ASTM.

periodically to irrigate an area. Selecting appropriate pressure ratings will be discussed in more detail later.

The pressure rating of schedule pipe varies with pipe diameter (table 7.1). Schedule 40 and 80 pipes are sometimes used in irrigation designs. Schedule

80, usually grey in color, is a thicker-walled pipe than schedule 40 (usually white) and is used for threaded connections. For diameters less than 5 in., schedule 40 is thicker-walled and, thus, has a higher pressure rating than class 200. Even though not needed for the pressure rating, it is sometimes used in place of class 200 in small diameters because of its much better resistance to mechanical damage caused by digging. The thicker pipe is also much easier to cut using the hand shear. (The thinner pipe collapses when cut by sheers.) PVC pipe is available in two standards: *iron pipe size* (IPS) or *plastic irrigation pipe* (PIP). By far the most common, the IPS standard has the same outside dimensions for all class and schedule pipe, so that all pipes and fittings of the same diameter will fit together. For example, class 200 pipe will fit schedule 40 pipe and both can use the same fittings. This is a big advantage when installing irrigation systems.

Specifications of PVC pipe are clearly marked on the pipe. The pipe shown in figure 7.4 is 1 in. nominal size, schedule 40 pipe with a 450 lb/in.^{2} pressure rating. Approved by the National Sanitary Foundation for use with potable

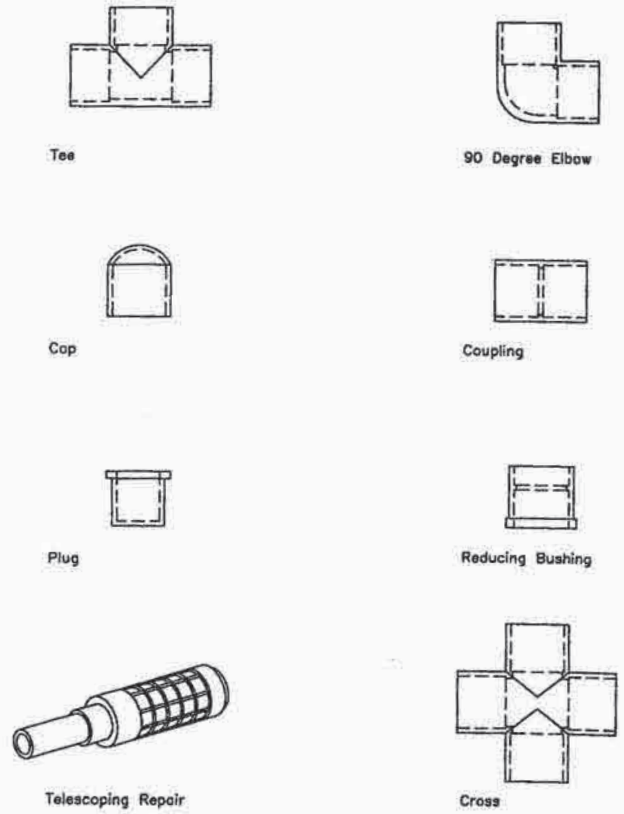

Figure 7.5. Commonly used PVC slip fittings.

water, it meets American Society of Testing Materials standard D-1785 and is made of PVC 1120 material. Dimensions and pressure losses for PVC pipe can be found in appendix C.

There is a large assortment of fittings used in PVC installations. Some of the more common fittings are shown in figures 7.5, 7.6, and 7.7. The "slip" fittings (fig 7.5) are connected to other fittings or pipe by solvent weld while the adapters (fig 7.6) allow for the connection of slip and threaded connections. The telescoping repair (fig 7.5) is a relatively new device which is useful when existing pipe lines have to be cut for repair or modifications. Its variable length provides the required flexibility to reconnect the joint.

Polyethylene Pipe

Polyethylene (PE) has less strength than PVC and requires thicker pipe walls to achieve pressure ratings equal to PVC pipe. The black PE pipe contains carbon black to help it resist deterioration from sunlight. Joints are usually connected by insert fittings with band clamps (fig. 7.8), but in a few drip irrigation cases, external compression fittings are used (fig 7.9).

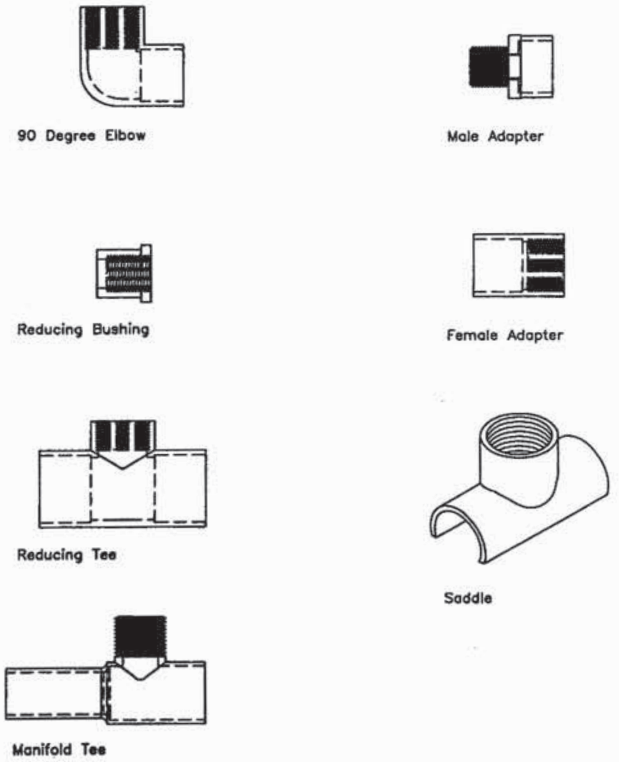

Figure 7.6. Commonly used PVC adapters.

Because of its flexibility and resistance to deterioration from sunlight, PE pipe is used extensively as laterals for drip irrigation systems. Its flexibility also allows PE pipe to expand as water freezes and is used as sprinkler system laterals in areas where soil profile freezing is a problem.

PE pipes are manufactured in four different materials referred to as type I, low density; type 2, medium density; and types III and IV, high density. The low density types are more flexible and have lower pressure ratings than the high density types. Although PE pipe is available in both schedule and class, class rated pipe is more commonly used in irrigation and is available in pressure ratings of 40, 50, 64, 80, 100, 125, 160, 200, and 250 lb/in.^{2} (Watkins, 1987; ASAE, 1993, S376.1).

Constructed according to ASTM standard 2239, PE pipe is identified similar to PVC pipe. The 3/4 in. pipe shown in figure 7.10 was manufactured by Silver-line using PE-3408 material and has a standard inside dimensional ratio (SIDR) of 9. Its rated pressure is 160 lb/in.^{2} at 230° C. This pipe is constructed so that its inside diameter remains constant with changes in pipe thickness

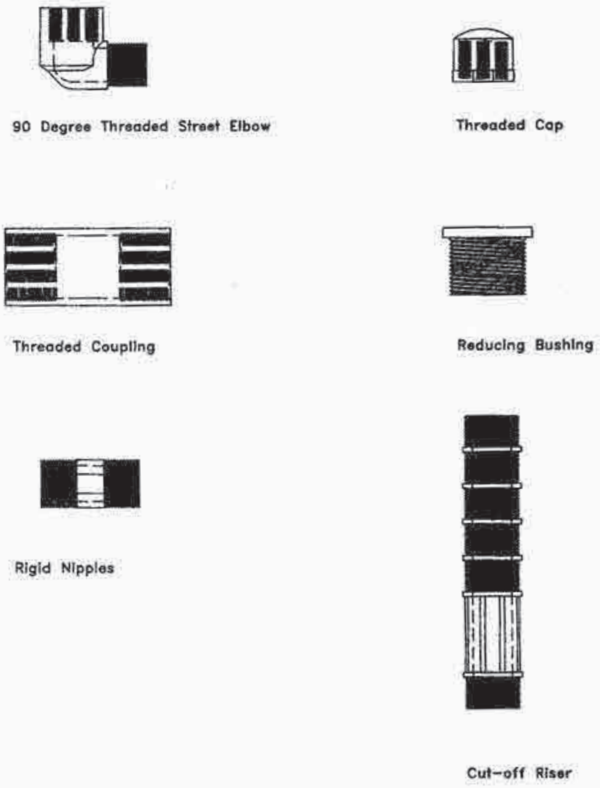

Figure 7.7. Threaded connectors used in PVC pipe systems.

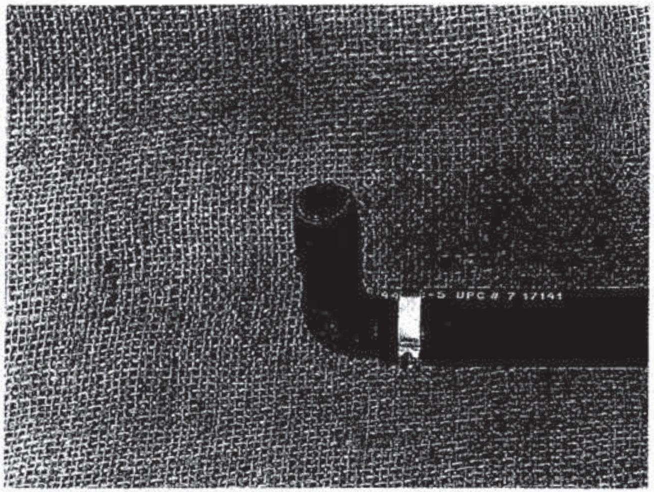

Figure 7.8. PE pipe with internal connector and secured with an ear clamp.

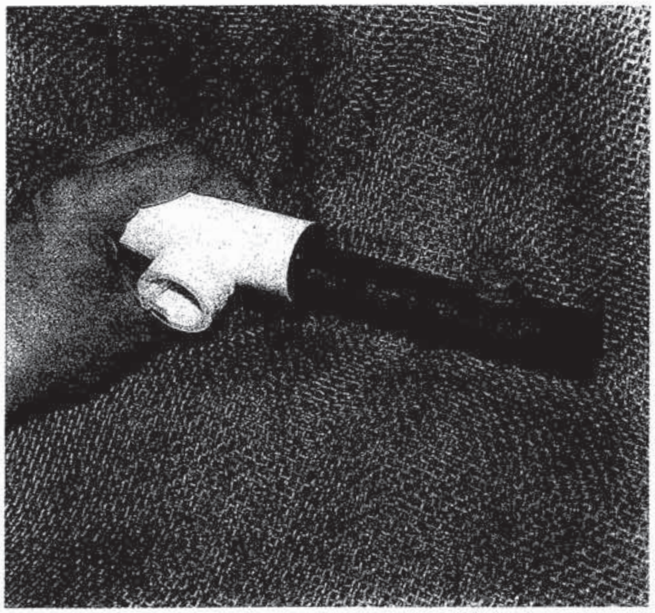

Figure 7.9. PE pipe with external compression connector.

and pressure rating. The inside fittings can be used for various pressure-rated pipe.

Pressure ratings of both PE and PVC pipes decrease significantly when water temperatures exceed 23° C (73° F). In those cases, a lower pressure rating should be computed multiplying by published factors (ASAE, 1993, S376.1) for the different materials selected.

Figure 7.10. PE pipe with identification.

Copper Tubing

Copper tubing is usually encountered at the point of connection (POC) with public water supplies. There are three types of copper tubing (types K, L, and M) with different wall thicknesses and pressure ratings. Type K has the greatest thickness and pressure rating, and type M has the thinnest and lowest pressure rating. The pressure rating on all three types is adequate for most irrigation needs, exceeding 200 lb/in.^{2} for 5 in. or smaller pipe sizes. Depending upon the type of solder used, the actual pressure rating of the pipe system, including soldered joints, may be lower than this value, but it will still be at least 150 lb/in.^{2} for 4 in. or smaller diameter. All three types are available in rigid, straight lengths, while types K and L are also available in soft annealed which can be bent (Watkins, 1987). Pipe sizes, dimensions, and friction loss values can be found in appendix C.

Sizing Pipe

Selecting the proper pipe size is important both from an economic as well as an operational aspect. Pipes that are too small will have high water velocities and high friction losses which may result in poor application uniformities or pipe failure from water hammer (a problem to be discussed later). In terms of safety, pipe size can be selected based on water velocity (known as *velocity method*). Although some designers use slightly higher values, 5 ft/s generally is considered to be the maximum recommended velocity for PVC and PE pipes. Selecting pipe size based on this criteria is as simple as determining the flow in the pipe, finding the appropriate table in the appendix, and then finding the smallest pipe with a velocity below 5 ft/s.

Example 7.1

Find the pipe size for a 20 gal/min flow through a class 200 PVC pipe. The pipe size is selected from table C2. The smallest pipe available is 3/4 in. and has a velocity of 9.43 ft/s at 20 gal/min. This is too high. The 1 1/4 in. pipe, however, has an acceptable velocity of 3.62 ft/s. Adjacent to this value, we determine the friction loss of 1.51 lb/in.^{2} per 100 ft of pipe. The total pressure loss due to friction loss can be computed by multiplying the pressure loss per 100 ft by the length of the pipe divided by 100. Pressure loss can be reduced by increasing the pipe size, but pipe size cannot be reduced without violating the velocity limit.

Example 7.2

This same concept can be applied to a sprinkler circuit which has multiple outlets and pipe flows. The example circuit (fig. 7.11) has six sprinklers, each discharging 6 gal/min at 30 lb/in.^{2} and using schedule 40 pipe. We know that the pressure will be different at the different heads because of friction loss. However, if the system is designed to place the design pressure near the middle of the zone, some heads will have slightly higher flow and others will have slightly lower flow. Therefore, for this computation, assume all heads have a 6 gal/min design flow. Beginning at the downstream end of the pipe, compute the flow in each section by adding 6 gal/min to the pipe flow as you move upstream past each head. Pipe sizes are then selected from table 7.2 to maintain water velocity at or below 5 ft/s and you will end up with four different pipe sizes (table 7.3). Some of the pipe sizes could be increased to simplify the design or to reduce pressure loss due to friction, but we can't reduce pipe size.

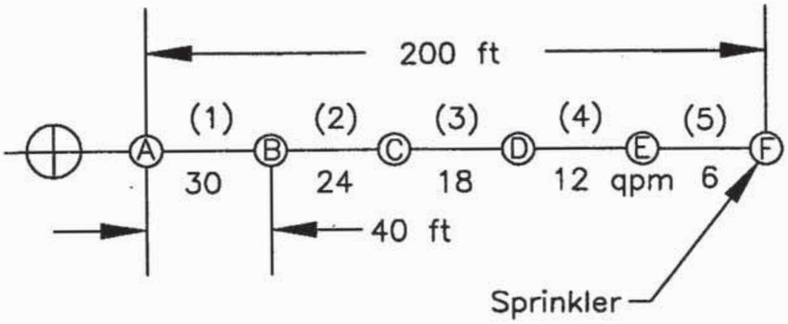

Figure 7.11. Pipe sizing example.

Table 7.2. PVC pipe capacity based on 5 ft/s maximum velocity

Size (in.)	Schedule 40 (gal/min)	Class 200 (gal/min)	Class 160 (gal/min)
3/4	1 – 8	1 – 10	–
1	9 – 13	11 – 17	1 – 17
1 1/4	14 – 23	18 – 27	18 – 28
1 1/2	24 – 32	28 – 36	29 – 37
2	33 – 52	37 – 56	38 – 59

The previous example meets our velocity design requirement but still may not be an acceptable design because of pressure variation in the pipe line causing excessive changes in flow of the different sprinkler heads. A generally accepted rule for non-pressure compensating sprinklers is to limit pressure changes in the sprinkler lateral to ±10% of the design pressure. This maintains flow changes to within an acceptable ±5%. For sprinklers at the same elevation, the maximum difference is between the first and the last sprinkler.

Example 7.3

For example 7.2, the allowable pressure change would be ±10% of 30 lb/in.^{2} or ±3 lb/in.^{2} for a total change of 6 lb/in.^{2}. Using the friction loss tables from the appendix, we can determine the pressure loss in each section and sum up the total loss between the first and last sprinklers (table 7.3) to be an acceptable 4.8 lb/in.^{2}.

The example problem becomes a little more difficult when the pipe is not on level ground. A general relationship can be developed for both level and sloped ground:

$$p_{al} = 0.20\, p_{av} \pm 0.43\, \Delta z \qquad 7.1$$

where p_{al} = allowable pressure loss (psi)
p_{av} = average sprinkler operating pressure (psi)
Δz = elevation change (ft)
(+ for downhill and – for uphill)

{The constant, 0.43 ft/psi, in equation 7.1 is the value to convert ft to psi. The equation is equally valid for metric units when using 1 m/9.81 kPa conversion.}

Table 7.3. Pipe sizing and pressure loss computations for example problem

Sprinkler	A	B	C	D	E	F
Pipeline and sprinklers	O——O——O——O——O——O					
Flow (gal/min)	30	24	18	12	6	
Velocity Method (level pipe)						
Pipe size (in.)	1 1/2	1 1/2	1 1/4	1	3/4	
Pressure loss (lb/in.^{2} / 100 ft pipe)	2.28	1.51	1.88	3.36	3.01	
Distance (ft)	40	40	40	40	40	
Pressure loss/section (lb/in.^{2})	0.91	0.60	0.75	1.34	1.20	
Total pressure loss (lb/in.^{2})	4.82					
Allowable Pressure Loss Method (sloping pipe)						
Pipe size (in.)	2	1 1/2	1 1/2	1 1/4	1	
Pressure loss (lb/in.^{2} / 100 ft pipe)	0.68	1.51	0.89	0.89	0.93	
Distance (ft)	40	40	40	40	40	
Pressure loss/section (lb/in.^{2})	0.27	0.60	0.36	0.36	0.37	
Frictional pressure loss (lb/in.^{2})	1.96					

Example 7.4

From the earlier example, assume that sprinkler F is 6 ft higher than sprinkler A. Since the downstream sprinkler is higher, we lose pressure due to elevation and, thus, use a negative value in equation 7.1:

$$p_{al} = 0.20(30\,\text{psi}) - 0.43(6\,\text{ft})$$

$$= 3.40\,\text{psi}$$

The allowable friction loss is now 3.4 lb/in.^{2} which is less than the previously computed 4.8 lb/in.^{2}. Thus, another approach to pipe sizing is now required. With this approach, the *allowable pressure loss method*, each section of pipe will be sized so that the total loss will not be greater than the maximum desired loss. The steps are as follows:

1. Compute the allowable loss per 100 ft:

$$(3.4\ \text{lb/in.}^2)\frac{100\ \text{ft}}{200\ \text{ft}} = 1.7\ \text{lb/in.}^2$$

2. Use the appropriate friction loss table in the appendix to select a pipe size for each section so that the losses in that section are lower than the allowable loss (see table 7.3).

With this method, most of the pipe sizes have been increased to the acceptable total loss due to friction of 1.96 lb/in.^{2}.

The *allowable pressure loss method* assures an acceptable pressure loss, but does not insure that the pipe sizes are as small as possible. In this example, pipe sizes could be reduced in one or two sections and still be within the acceptable friction loss value of 3.4 lb/in.^{2}.

Chapter 7 Problems

7.1 Compute the wall thickness of 1-, 2-, and 3-in. class 160 PVC. Determine the dimension ratio for each of the sizes using the outside diameter of the pipe.

7.2 Determine the water velocity and pressure loss due to friction in 750 ft of 1-in. type K copper pipe. Flow is 11 gal/min.

7.3 A sprinkler zone is composed of one straight, class 200 PVC pipe with sprinklers located every 60 ft. Determine the minimum pipe size for each section based on velocity if the zone has 6 sprinklers each discharging 4 gal/min.

7.4 Size the 300-ft long pipeline in problem 7.3. Limit the POC water pressure so that the total loss in the zone cannot exceed 3 lb/in.^{2}.

Valves, Meters, Screens, and Regulators

9

In every irrigation system there is an assortment of components to help make it work. In this chapter, we'll discuss some of the more important ones. Valves are an integral part of all automated irrigation systems. Mechanical valves are opened and closed manually by the system operator. Diaphragm valves are operated remotely by electronic controllers. Selecting the proper valves requires knowledge about how they work and where they should be used.

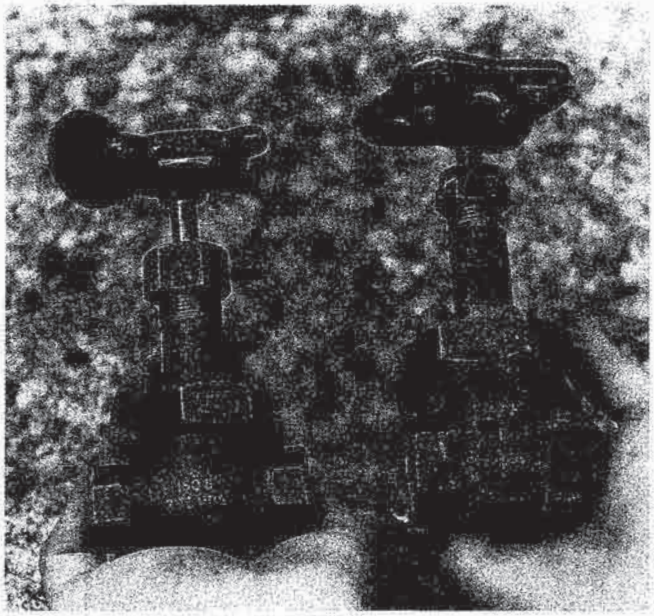

Figure 9.1. Mechanical valves commonly used in irrigation systems (left, globe valve; right, gate valve).

Mechanical Valves

Globe and *gate* valves are two commonly used valves that look very much alike but are quite different (fig. 9.1). These valves are available in several materials including brass and plastic. The valves are similar on the outside with wheel-shaped handles requiring multiple turns to open or close the valve. Internally, however, the valves are different (fig. 9.2). The *gate valve* has a round disk, called a gate, that is lifted as the handle is turned. When fully open, water flows straight through the valve with little pressure loss. One shortfall of gate valves, however, is the tendency for water to leak through the valve when it's closed.

Water has to change direction as it flows through the *globe valve*. Water enters from the left (fig. 9.2), turns upward through the control section, and then turns down and horizontally again as it leaves the valve. The globe valve has a replaceable washer mounted on the moving horizontal disk that makes a leak resistant seal when it contacts the valve seat. Since water changes direction a couple of times in globe valves, there is considerably more pressure loss than with gate valves. For this reason, gate valves are more often used on mainlines as shut-off valves than are globe valves. Pressure-loss values through globe valves can be found in table 9.1.

An *angle valve* is similar to a globe valve (figs. 9.2, 9.3) but has less pressure loss since water changes direction fewer times. Angle valves are commonly

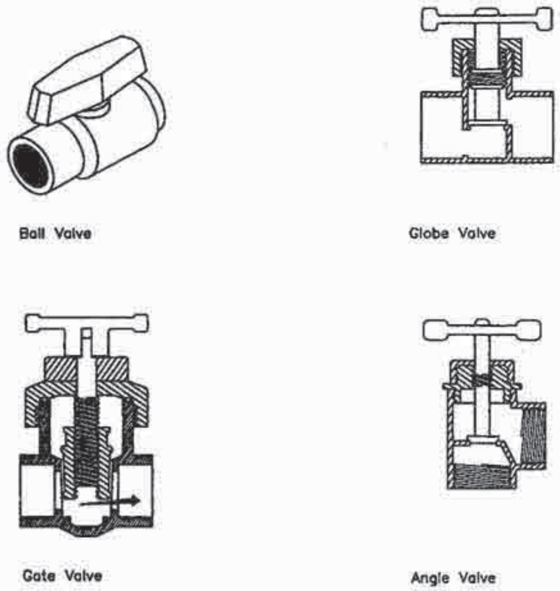

Figure 9.2. Commonly used valves.

Table 9.1. Pressure loss through globe valves

	Valve Size (in.)				
	1/2	3/4	1	1 1/4	1 1/2
Flow gal/min	(lb/in.^{2})				
2	0.6				
4	2.2	0.7			
6	4.7	1.5	0.6		
8	7.9	2.5	1.0		
10	12.2	3.8	1.5		
12	17.2	5.3	2.1	0.7	
14	22.8	7.1	2.8	0.9	
16		9.0	3.6	1.2	0.7
18		11.2	4.4	1.5	0.9
20		13.7	5.4	1.9	1.0
22		16.2	6.4	2.2	1.2
24		19.0	7.5	2.6	1.4
26		22.1	8.7	3.0	1.7
28			10.0	3.4	1.9
30			11.3	3.9	2.2
32			12.8	4.4	2.5
34			14.3	4.9	2.7
36			16.0	5.5	3.0
38			17.7	6.1	3.4
40			19.5	6.7	3.7

Source: *RainBird technical data*. 1976. Glendora, Calif.: RainBird Sprinkler Mfg. Corp.

used at valve locations where a change in direction is also required. (See table 9.2 for pressure-loss values for angle valves.)

Ball valves (figs. 9.2, 9.4) have an internally mounted ball with a hole in the center for water to pass through. Water flows directly through an open ball valve, thus, it has low pressure losses similar to gate valves. Rotating the ball 90° with the turn lever opens or closes the valve. A ball valve is a good choice at locations where quick closure and low pressure loss are desired.

A *corporation valve* (fig 9.5) is a quarter-turn valve similar to a ball valve with two exceptions. Internally, there is a circular disk rather than a ball, and externally the handle is missing. This valve is used by public water suppliers at supply points. A separate T-handle is used by the water supplier to turn water on or off. This valve is normally not operated by the water user, but can be used by the irrigation installer to turn off water during installation, if necessary.

Pressure loss through valves is sometimes available directly from tables such as

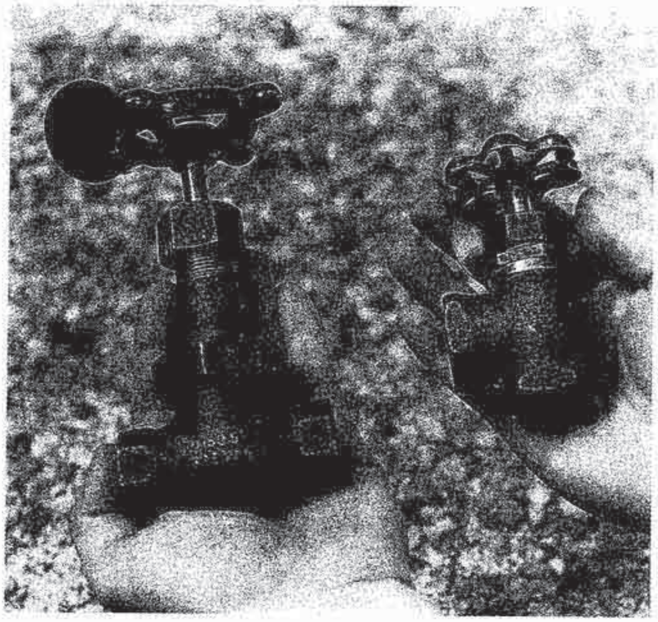

Figure 9.3. Globe valve (left) and angle valve (right).

Table 9.2. Pressure loss through angle valves

Flow gal/min	Valve Size (in.)				
	1/2	3/4	1	1 1/4	1 1/2
	(lb/in.²)				
2	0.3				
4	1.1	0.4			
6	2.3	0.7	0.3		
8	4.0	1.2	0.5		
10	5.8	1.9	0.7		
12	8.1	2.7	1.0	0.4	
14	10.8	3.5	1.4	0.5	
16		4.5	1.8	0.6	
18		5.6	2.2	0.8	0.4
20		6.8	2.7	0.9	0.5
22		8.5	3.2	1.1	0.6
24		9.9	3.8	1.3	0.7
26		11.5	4.4	1.5	0.8
28			5.0	1.7	1.0
30			5.7	2.0	1.1
32			6.4	2.2	1.2
34			7.2	2.5	1.4
36			8.0	2.8	1.5
38			8.9	3.1	1.7
40			9.7	3.3	1.9

Source: *RainBird technical data.* 1976. Glendora, Calif.: RainBird Sprinkler Mfg. Corp.

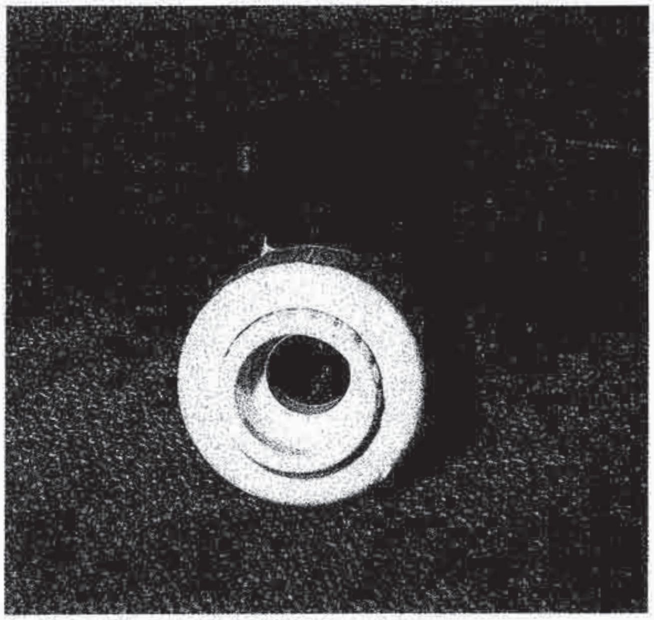

Figure 9.4. Ball valve.

tables 9.1 and 9.2. Another way that pressure loss in valves (and fittings) can be computed is through equivalent length. This means that a component has pressure loss equivalent to a specified length of pipe. Thus, when computing pressure loss in piping systems, additional length of pipe is added to account for that component. For example, in table 9.3, a 1-in. globe valve is shown to

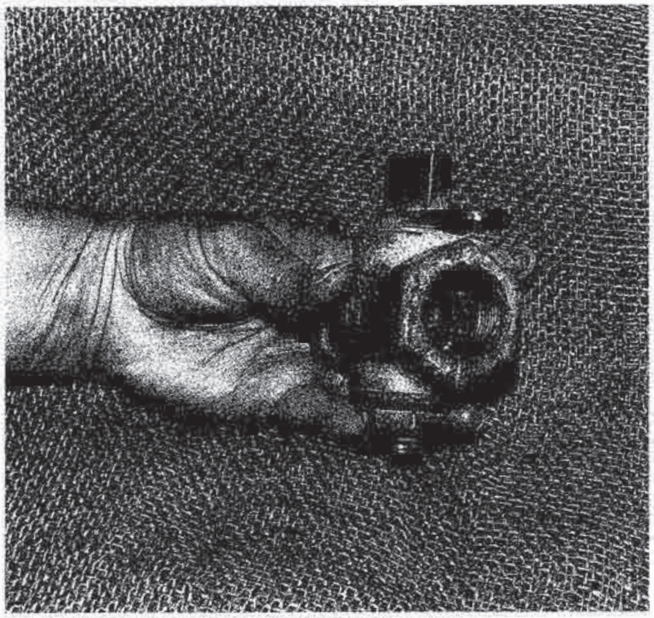

Figure 9.5. Corporation valve.

Table 9.3. Pressure loss in valves and fittings*

Nominal Pipe Sizes	Globe Valve	Angle Valve	Gate Valve	Side Outlet Std. Tee	Run of Std. Tee	Std. Elbow	45° Elbow	Corporation Valve
3/4	22	12	0.5	5	2	3	1	10
1	27	15	0.6	6	2	3	2	9
1 1/4	38	18	0.8	8	3	4	2	13
1 1/2	45	22	1.0	10	3	5	2	12
2	58	28	1.2	12	4	6	3	11
2 1/2	70	35	1.4	14	5	7	3	–
3	90	45	1.8	18	6	8	4	–

*Equivalent length (ft) of standard steel pipe.

Sources: *Specifications manual / Reference charts*. 1990. Glendora, Calif.: RainBird Sprinkler Mfg. Corp.

Watkins, J. 1987. *Turf irrigation manual*. Appendix table 17. Dallas, Tex: Telsco Industries.

be equivalent to 27 ft of standard steel pipe. Unfortunately, the conversion to PVC pipe is not well-defined in the literature. Variations in pipe roughness and size and component roughness and size serve to complicate the issue. Using pipe roughness values and the Hazen-Williams formula, a conversion factor or 2.2 can be obtained. Thus, for PVC piping systems, values in table 9.3 would be multiplied by 2.2. Using this factor results in higher and, thus, more conservative pressure loss computations than ignoring the fittings or directly using table 9.3.

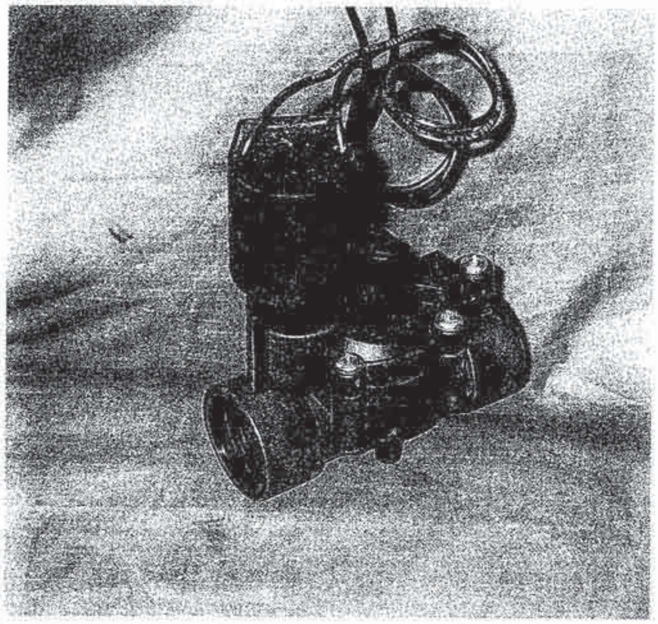

Figure 9.6. Electrically actuated diaphragm valve.

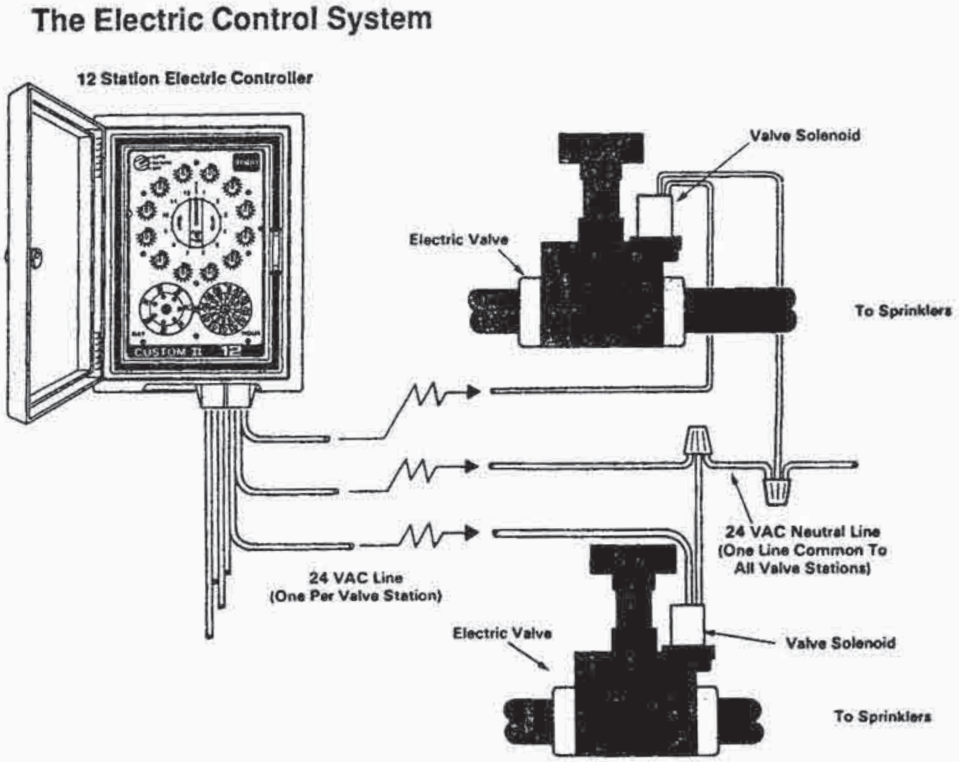

Figure 9.7. Schematic of an electrically actuated diaphragm valve and controller. (Source: *A guide to troubleshooting automatic sprinkler systems.* 1989. Riverside, Calif.: The Toro Company.)

Diaphragm Valves

Diaphragm valves are the heart of a remotely controlled irrigation system (fig. 9.6). They receive a signal sent from the controller and turn a pipe circuit on or off (fig. 9.7). Most diaphragm valves used in residential designs are electrically actuated, meaning that the signal from the controller is electrical. Some golf-course and athletic-field systems are hydraulically actuated, meaning there is a small tube with pressurized water that supplies the control signal to the valve.

At first glance, diaphragm valves appear complicated, but their basic operation is relatively simple (fig. 9.8). The valve is either opened or closed depending on the force exerted on the top side of the diaphragm, a flexible rubber-like disk. There's more surface area on top of the diaphragm than on the bottom, so if the pressure on both sides is equal, the valve closes by moving down. Thus, if water pressure from the entrance side of the valve is allowed to build up on top of the diaphragm, the valves closes. If water pressure doesn't build up, the valve opens or remains open. Because of pressure loss through the valve, there's an unrestricted pathway from the entrance side of the valve to the top of the diaphragm and another pathway that allows water on top of the diaphragm to flow to the down-stream side of the valve where the water pressure is lower. If this pathway is open, the force above the diaphragm is lower than the force below the diaphragm and the valve is open. This is the point at which the signal from the controller is important.

There's a smaller valve, the solenoid valve, (fig. 9.8) that controls the flow of water from the top side of the diaphragm to the down-stream side of the valve. A 24-V signal causes a magnetic field to move a metal plunger and open or close the smaller pilot valve. Thus, the signal from the controller only opens or closes the pilot valve, and water pressure does the rest.

Diaphragm valves are available in both *normally open* (NO) and *normally closed* (NC) models. In a normally open model, the valve is open when a signal is not being received from the controller. The reverse is true for normally closed valves. Most electrically actuated systems are normally closed while many hydraulic systems are normally open. There are advantages for both. For example, in a golf-course setting, the quickest way to observe a system failure would be with a normally open system where sprinklers would operate con-

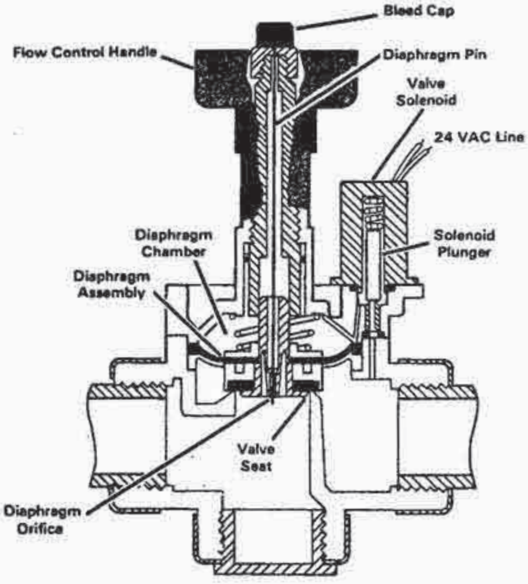

Figure 9.8. Schematic of an electrically actuated diaphragm valve. (Source: A *guide to troubleshooting automatic sprinkler systems*. 1989. Riverside, Calif.: The Toro Company.)

tinuously until manually shut off and repaired. A normally closed system is preferred if excess water poses a problem.

There are several other features that sometimes appear on diaphragm valves. These include manual control, manual bleed, pressure regulation, and flow control. Manual control allows the valve to be operated at the valve site, manual bleed allows the valve to be flushed of air and trash, and pressure regulation provides regulation of the downstream pressure.

Pressure loss through a diaphragm valve is slightly more complicated than through mechanical valves. With mechanical valves, pressure loss always increases with increased flow. With diaphragm valves, the diaphragm is not always fully open, especially at low flows. (See 1-in. valve in table 9.4.) Actually, there's a minimum pressure loss required for electric valves to operate properly. It's important, therefore, to select a valve that works well at the desired flow and to use the actual pressure loss of the chosen valve.

Water Meters

Water meters are used to measure the volume of water that flows through the meter, and sometimes the flow. For public water supplies, the meter is usually supplied by the water provider, but the user usually pays a fee to cover the cost of the meter and its installation.

Of the many types of meters, the *nutating disk* is the most common for residential installations (fig 9.9, top). As water flows through the meter, an internal disk flops back and forth. The external gage registers the flops which have been calibrated in gallons of water.

Table 9.4. Pressure loss values for typical electrically actuated diaphragm valves

	Valve Size (in.)				
	3/4*	1†	1†	1½†	1½†
Flow gal/min	(lb/in.^{2})				
2		1.9	2.0		
5	2.9	2.2	2.2		
10	3.8	2.3	2.4		
20	5.1	2.5	1.9		
30		5.9	4.1	1.7	1.2
40		9.9	7.3	3.0	1.8
50				4.8	3.0

*RainBird DV series.

†RainBird PGA series.

Source: *Landscape irrigation products catalog.* 1993–1994. Glendora, Calif.: RainBird Sprinkler Mfg. Corp.

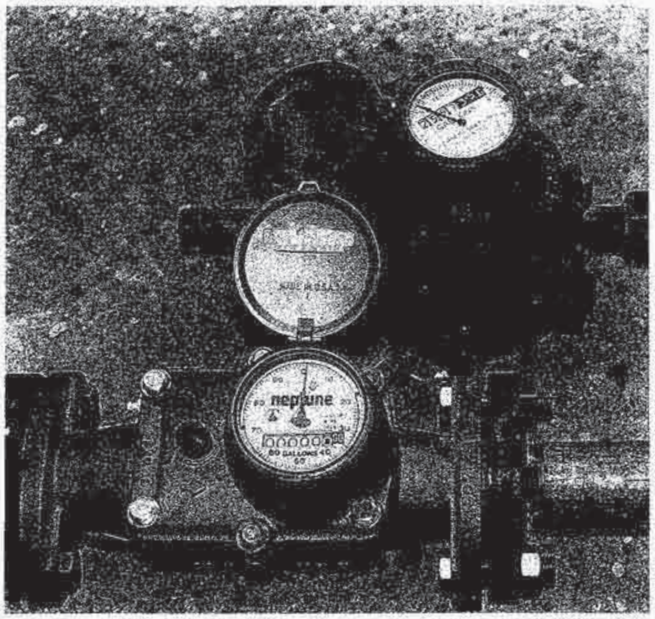

Figure 9.9. Nutating disk flowmeter (top) and main-line propeller meter (bottom).

Most often in installations of residential irrigation systems, the water meter has already been installed and the meter size limits the available flow (table 9.5). The irrigation designer has either the option to have a new meter installed at additional cost or to work within the limits of the existing meter. Additionally, many residential sites have a sewer charge based on water usage, which increases the cost of water. In some cases, a second meter strictly for outdoor use can be added for a one-time installation cost to avoid the sewer charge for the irrigation water.

Another type of meter that is sometimes encountered is the mainline propeller meter (fig. 9.9, bottom). This meter generally has lower pressure losses and many times is specified as part of the irrigation design for larger irrigation systems which use otherwise unmetered water. Meters using other measuring principles are also available.

Screens

Many irrigation-system components require reasonably clean water to function correctly and dependably. Some of the more sensitive devices include drip emitters, diaphragm valves, back flow prevention devices, and sprinklers. Many of these have some built-in screen protection, but additional protection at the entrance to the system is usually justified even for public water supplies.

Table 9.5. Pressure loss through disc-type water meters

	Meter Size (in.)				
	5/8	3/4	1	1 1/2	2
Flow gal/min	(lb/in.^{2})				
6	1.3	0.56	0.28	0.21	0.13
8	2.3	1.0	0.39	0.29	0.17
10	3.7	1.6	0.55	0.37	0.22
12	5.2	2.2	0.79	0.46	0.27
14	7.3	3.1	1.1	0.55	0.32
16	9.5	4.1	1.4	0.66	0.37
18	12.1	5.2	1.8	0.76	0.42
20	15.0*	6.5	2.2	0.89	0.49
22		7.9	2.7	1.0	0.55
24		9.4	3.3	1.2	0.60
26		11.2	3.9	1.4	0.67
28		13.2	4.6	1.6	0.72
30		15.0*	5.3	1.8	0.79
32			6.1	2.0	0.87
34			6.9	2.2	0.94
36			7.7	2.5	0.99
38			8.7	2.8	1.1
40			9.6	3.1	1.2
50			15.0*	4.9	1.9

* Represents friction loss at maximum safe flow for that meter. Source: *RainBird technical data.* 1976. Glendora, Calif.: RainBird Sprinkler Mfg. Corp.

Stream and lake water may have enough suspended material to require additional filtration. Many times *media filters* are used in addition to screen filters. Under those conditions, the designer should review additional materials prior to specifying filtration. For cleaner waters, especially those that have had some form of chemical treatment, a simple screen filter is usually adequate. The *wye screen*, in the form of a circular tube, is a good example (fig. 9.10). Water flows through the tube removing particles from the water. The tube can be removed for cleaning, or in some cases a discharge valve is opened allowing water to flush the screen surface clean.

Two important considerations in selecting screens are capacity and screen size. Usually, the manufacturer will provide an appropriate range of flows for the screen along with the pressure loss associated with the flows (table 9.6). As usual, increased flow through a screen causes increased pressure losses. Pressure losses also increase as the screen becomes dirty. Choosing a larger capacity screen reduces pressure loss and maintenance. Screen filtering abili-

Table 9.6. Friction loss values for typical 3/4- and 1-in. in-line screens*

		Mesh			
		30	100	150	200
Size (in.)	Flow gal/min	(lb/in.^{2})			
3/4	5	0	0	0	0.5
	10	0	0.5	0.5	1.5
	15	1.8	2.4	2.6	2.9
	20	3.8	5.2	5.4	5.4
	30	9.0	12.0	12.5	13.0
1.0	5	0	0	0	0
	10	0.5	0.5	0.5	0.5
	15	1.7	2.1	2.2	2.5
	20	3.5	4.7	4.9	4.9
	30	6.4	8.6	8.8	8.8

*Values are for in-line wye filter.
Source: *Landscape irrigation products catalog*. 1993–1994. Glendora, Calif.: RainBird Sprinkler Mfg. Corp.

denote screen size are by the number of holes per inch or mesh size, and by the actual size of the hole in microns. (A micron is 0.001 mm.) Most screen-filters have a choice of screen sizing. In choosing filtering capacity, the largest screen size that will meet down-stream needs is a good selection since it will require the least cleaning and maintenance.

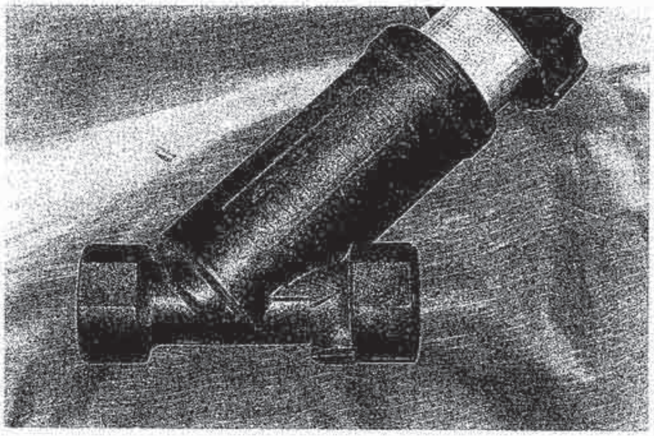

Figure 9.10. Wye Screen.

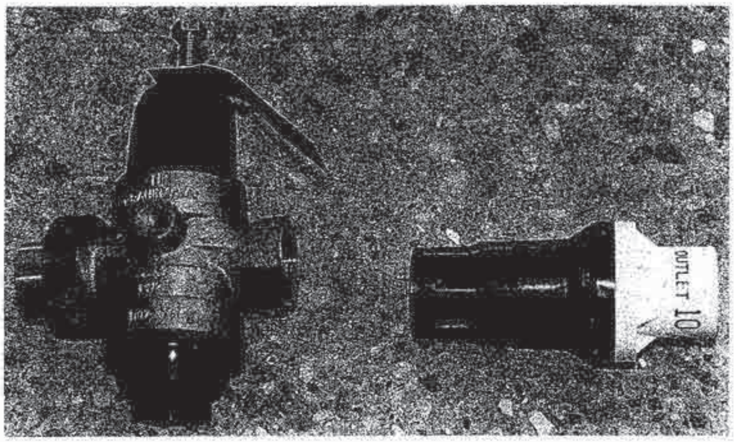

Figure 9.11. Pressure regulators (adjustable outlet pressure, left; fixed outlet pressure, right).

Pressure Regulators

Pressure regulators provide a constant pressure down-stream from the regulator regardless of up-stream pressure so long as up-stream pressure is greater than the required pressure. Small systems that operate at a single pressure may require a single regulator at the point of connection if supply pressure is excessive. A regulator can be used on each circuit when different pressures are required on different circuits. Larger systems, such as those found on golf courses may have large pressure differences at different points in the system, thus, requiring pressure regulation. Some sprinkler heads, especially larger ones, have a pressure regulator directly built into the head, thus simplifying the design process.

Regulators are available in fixed-pressure and adjustable-pressure models (fig. 9.11). Fixed-pressure models are less expensive and provide a known discharge pressure without calibration. Although more expensive, adjustable-pressure models can be varied at any time to provide additional flexibility in design and operation.

Using pressure regulators is not quite as simple as it sounds. For example, you probably won't get exactly 10 $lb/in.^2$ outlet pressure when you choose a 10 $lb/in.^2$ fixed-pressure regulator. The pressure will likely be higher than 10 for low flows and lower than 10 for high flows. The regulators described in table 9.7 have a ±6% variation, or ±0.6 $lb/in.^2$ change, for the 10 $lb/in.^2$ reg-

Table 9.7. Performance data for typical fixed-pressure regulators

Model	Operating Pressure* (lb/in.^{2})	Flow Range (gpm)	Inlet Size (NPT)† (in.)	Outlet Size (NPT) (in.)
Low Flow				
PMR-6LF	6	0.5 – 5	3/4F‡	3/4F
PMR-10LF	10	0.5 – 5	3/4F	3/4F
PMR-12LF	12	0.1 – 8	3/4F	3/4F
PMR-15LF	15	0.1 – 8	3/4F	3/4F
PMR-20LF	20	0.1 – 8	3/4F	3/4F
PMR-25LF	25	0.1 – 8	3/4F	3/4F
PMR-30LF	30	0.1 – 8	3/4F	3/4F
Medium Flow				
PMR-6MF	6	4 – 16	3/4F, 1F, 1M	3/4F, 1F
PMR-10MF	10	4 – 16	3/4F, 1F, 1M	3/4F, 1F
PMR-15MF	15	2 – 20	3/4F, 1F, 1M	3/4F, 1F
PMR-20MF	20	2 – 20	3/4F, 1F, 1M	3/4F, 1F
PMR-25MF	25	2 – 20	3/4F, 1F, 1M	3/4F, 1F
PMR-30MF	30	2 – 20	3/4F, 1F, 1M	3/4F, 1F
PMR-35MF	35	2 – 20	3/4F, 1F, 1M	3/4F, 1F
PMR-40MF	40	2 – 20	3/4F, 1F, 1M	3/4F, 1F
PMR-50MF	50	2 – 20	3/4F, 1F, 1M	3/4F, 1F
PMR-60MF	60	2 – 20	3/4F, 1F, 1M	3/4F, 1F
High Flow				
PR-10HF	10	10 – 32	1 1/4F	1F
PR-15HF	15	10 – 32	1 1/4F	1F
PR-20HF	20	10 – 32	1 1/4F	1F
PR-25HF	25	10 – 32	1 1/4F	1F
PR-30HF	30	10 – 32	1 1/4F	1F
PR-40HF	40	10 – 32	1 1/4F	1F
PR-50HF	50	10 – 32	1 1/4F	1F

* Actual regulated pressure is ±6% of nominal pressure. For decreasing inlet pressure, deduct 0.5 lb/in.^{2}.

† NPT = national pipe thread (standard pipe threads used in the U.S.).

‡ F, M = female and male pipe threads.

Source: *Peformance curves*. Orlando, Fla.: Senninger Irrigation Inc.

ulator depending on flow. The outlet pressure also depends on whether the inlet pressure has been decreasing or increasing. If the pressure has been high and is decreasing, the outlet pressure may be 0.5 lb/in.^{2} higher than if the pressure has been increasing. This phenomenon is called *hysteresis*. The outlet pressure for a 10 lb/in.^{2} pressure regulator could be any value from 10.6 to 8.9 lb/in.^{2}. Although this shouldn't be a problem, you need to be aware of these possibilities when designing irrigation systems.

Also, additional pressure supplied to the regulator in excess of the desired outlet pressure is necessary. For the regulators presented in table 9.7, and additional 3 lb/in.^{2} to 5 lb/in.^{2} is required. This value may be higher for other regulator brands. A conservative value to use with this regulator would be 5 lb/in.^{2}. Therefore, for example, at least 15 lb/in.^{2} to a 10 lb/in.^{2} regulator should be supplied.

Flow is also important in selecting a pressure regulator. All regulators have a recommended range of flows. Selecting a regulator outside its recommended flow range will likely result in poor regulation (table 9.7), high pressure losses, or both.

> {Fixed pressure regulators sold in the U.S. are generally available in psi units. Use conversion factors in the appendix B to convert to kPa.}

Chapter 9 Problems

9.1 Water pressure in a public water supply pipeline is 70 lb/in.^{2}. The existing water line to a proposed irrigation system includes 10 ft of type K 3/4-in. copper tubing, a 5/8-in. nutating disc water meter, a 3/4-in. corporation valve, a 3/4-in. gate valve, two, 3/4-in. elbows, and 275 ft of 3/4-in. schedule 40 PVC pipe. Determine the available pressure at the discharge point for a flow of 10 gal/min.

9.2 Compare the pressure loss for a 1-in. globe valve computed by equivalent length (table 9.3) to the values provided in table 9.1. Use several different flows. Are the values different? Explain.

9.3 Determine the pressure loss in kPa for a 100-mesh, 1-in. wye screen if the flow is 1 L/s.

Backflow Prevention 12

What is Backflow?

Backflow is the reverse flow of a liquid. In irrigation, it is the unwanted flow of water that has entered the irrigation system moving back into the water supply system. Without backflow-prevention, there are a number of ways that polluted water can reenter the piping system. For example, any sprinkler head located below the ground surface can have external water flow back into the piping system after the system is shut off. This water may bring with it dissolved chemicals or dangerous microorganisms. Under certain conditions, contaminated water can travel all the way back to the point of connection and eventually into someone's drinking water. This is most likely to occur when either the water supply is shut off because of a pipe break or because of valve closings for pipe repair. Pumping from hydrants by fire trucks can also reduce water pressure and cause reverse flow.

In this chapter we will discuss the recommended methods of preventing backflow and protecting our water supplies. As with electrical codes, you need to check with your local administrative authority to obtain local regulations. Many local authorities adopt the National Plumbing Code (PHCC, 1993) as their standard. The 1993 illustrated version provides excellent examples of backflow protection for irrigation systems.

Pollution and Contamination

Backflow specialists distinguish between polluted water and contaminated water. *Polluted water* contains some impurities that make it unpleasant but still safe to drink; while *contaminated water* is unsafe for consumption. Although contaminated water is of more concern to us, we can easily protect our drinking-water systems from both by the installation of some simple backflow devices. In many areas, certain types of backflow devices are required by regulation. Irrigation designers should be aware of local regulations and be sure to meet them as a part of their designs. Inadequate regulations, however, are no excuse for inadequate utilization of backflow devices. These devices should be specified, installed, and inspected regularly to insure the safety of the water-supply system used by the irrigation system and by the local community.

Types of Protection

There are two types of protection that should be considered. First, the public water supply needs to be protected from anything that might happen to the user's water. This is called *containment protection*, and is accomplished by the addition of a backflow device at the user's point of connection. Backflow device A (fig. 12.1) provides that protection and is usually required by the water authority. However, it does not protect the user's drinking water from contamination by the irrigation system. That's accomplished by backflow device B, which is referred to as *cross-connection protection*. A cross connection is any connection between potable (drinkable) and potentially non-potable water.

Factors Affecting Device Selection

There are four factors that assist in the proper selection of a backflow device.

Hazard. One of the factors affecting the appropriate selection of a backflow device is the degree of hazard involved. *High-hazard situations* involve toxic substances (contaminated water) and *low-hazard situations* involve non-toxic substances (polluted water). Turf areas are usually considered high-hazard situations because of the potential for application of toxic chemicals to the turf. In some areas, however, residential irrigation systems are treated as low-haz-

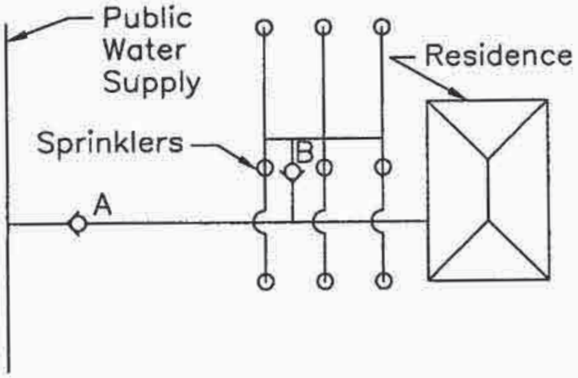

Figure 12.1. Piping diagram showing appropriate locations for backflow prevention devices.

ard systems. The injection of toxic substances into the irrigation water should always be classified as a high-hazard situation. Designers that plan to use injection systems, booster pumps, or combinations of potable and nonpotable water sources should obtain additional information on the proper selection of backflow devices.

Continuous Pressure. If water pressure is applied continuously to a backflow device for more than 12 h, it is considered to be under a continuous-pressure condition and certain backflow devices are eliminated from consideration. The primary concern with continuous pressure is the possibility that the device will stick open. Devices that are rated to operate under continuous pressure have a mechanism, such as a spring, to assist the valve-closing process.

Downstream Valve. When referring to backflow prevention devices, downstream valves mean valves located downstream from the backflow prevention device. When closed, downstream valves allow water pressure to build up and remain in the piping system downstream from the backflow device. If, for some reason, pressure decreases at the point of connection, thus providing the potential for backflow, the backflow device must operate against that back pressure. Some backflow devices aren't designed to meet this need.

Height Above Sprinkler. Sprinklers that are located higher than the backflow device provide some of the same problems as downstream valves. The vertical distance from the backflow device to the sprinkler causes a back pressure onto the device. To avoid this potential problem, certain types of backflow devices require sprinklers to be lower, usually 6 to 12 in. than the device. Under these conditions, backflow can only occur under back siphonage: water pressure at the backflow device will be less than atmospheric. Siphonage can be stopped by allowing air to enter into the piping system through the backflow device.

Types of Backflow Devices

Let's examine the four types of backflow devices which are used with irrigation systems. We'll begin with the simplest and least expensive and finish with the most complicated and expensive. Summaries of the device characteristics and pressure losses are provided in tables 12.1 and 12.2 and figure 12.2. Devices provided by other manufacturers may differ from those presented here, and you should carefully review the relevant specifications to ensure proper utilization of the devices. Also, local water authorities may specify special license requirements for installers and testers of backflow devices.

Table 12.1. Characteristics of backflow prevention devices used in irrigation systems

Device*	Hazard	Cont. Pressure	Down-stream Valve	Height Above Sprinkler (in.)
RP	High	Yes	Yes	–
PVB	High	Yes	Yes	12
AVB	High	No	No	6
DC	Low	Yes	Yes	–

*RP = reduced pressure.
PVB = pressure vacuum breaker.
AVB = atmospheric vacuum breaker.
DC = double check.
Source: *Backflow prevention products*.
North Andover, Mass.: Watts Regulator Company.

Table 12.2. Typical pressure losses through various backflow devices*

		Device†			
Size‡ (in.)	Flow (gal/min)	DC	AVB	PVB	RP
		(lb/in.^{2})			
3/4	5	4.4	0.4	3.3	11.2
	10	5.3	1.2	4.5	12.2
1	15	5.9	1.3	2.9	14.3
	20	6.6	2.2	3.0	12.5
1 1/4	25	8.1	1.8	3.0	10.6
	30	11.7	2.6	3.0	10.6
1 1/2	35		1.8	3.0	10.0
	40		2.3	3.1	10.0
2	50		0.9	3.5	9.4
	75		1.9	4.4	9.6

* Pressure losses are for Watts Regulator Products as reported in *Backflow prevention products*. North Andover, Mass.: Watts Regulator Company.

† DC = dual check series 7.
AVB = atmospheric vacuum breaker series 288A.
PVB = pressure vacuum breaker series 800.
RP = reduced pressure series 909.

‡ Device size based on maximum velocity of 7.5 ft/s.
Backflow prevention products. North Andover, Mass.: Watts Regulator Company.

Atmospheric Vacuum Breaker (AVB). The AVB is a simple and inexpensive device that protects against high-hazard situations (fig. 12.3). It has a single moving part, a float, which moves up or down to allow either normal flow or air into the piping system (fig 12.4). In a potential backflow situation, the water-supply pressure would decrease below atmospheric pressure causing water to siphon from the irrigation system. As soon as this situation occurs,

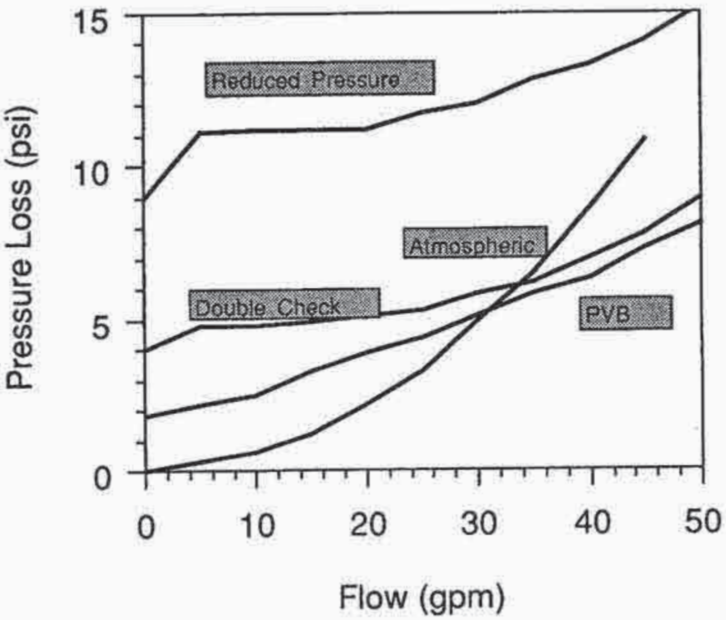

Figure 12.2. Typical pressure losses from 1-in. backflow devices. (Source: *Backflow prevention devices*. North Andover, Mass.: Watts Regulator Co.)

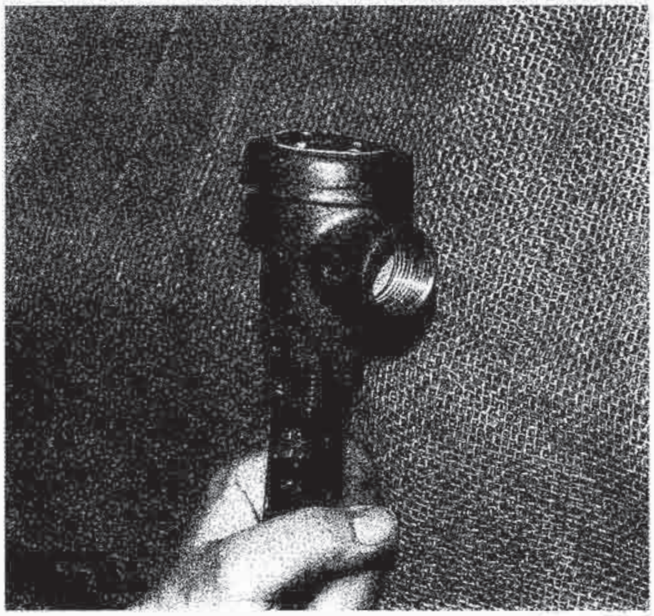

Figure 12.3. Typical atmospheric vacuum breaker backflow prevention device. (Watts Series 288A)

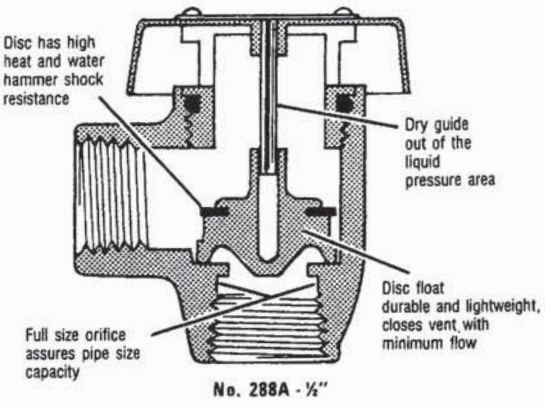

Figure 12.4. Schematic of atmospheric vacuum breaker. (Source: *Backflow prevention products*. North Andover, Mass.: Watts Regulator Co.)

the float inside the AVB drops, closing the supply line and allowing air into the irrigation line to prevent backflow.

Valves cannot be allowed downstream from the AVB; therefore, one AVB must be used for each circuit (fig. 12.5). Also, AVBs must be installed at least 6 in. higher than the highest sprinkler or drip emitter. Although the AVB can be mounted on a tall pipe to obtain the required height, this is usually not aesthetically acceptable and additional piping may be required to locate the valve at a high location. The additional cost of relocating the device to a high location and of using multiple devices on multiple circuits may make this option more expensive than the selection of a more expensive backflow device such as the PVB.

The pressure loss through the AVB is low (fig. 12.2) within it's usual operating range when compared to other backflow prevention devices. Since it does

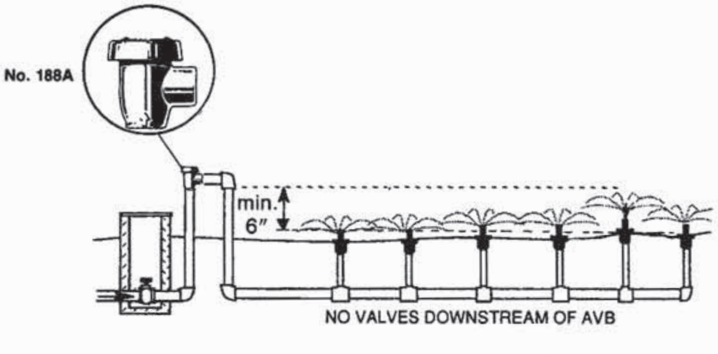

Figure 12.5. AVB used in single-zone irrigation system.

not have preloaded spring valves to introduce an initial pressure, the pressure loss at "no flow" is zero. This low pressure loss characteristic could be of value in situations of limiting POC pressure availability.

Pressure Vacuum Breaker (PVB). The PVB (figs. 12.6, 12.7) is slightly more complicated than the AVB. The float mechanism is spring-loaded to prevent valve sticking, and there is an additional, independent, spring-loaded check valve. These two additions allow the PVB to be used under continuous pressure along with the use of down-stream cutoff valves. Both features are highly desirable for many irrigation designs. A single PVB device can be used and located upstream from the zone-controlling diaphragm valves (fig. 12.8). However, this device must be 12 in. higher than any downstream piping to ensure appropriate air entry during potential back siphoning (fig. 12.9).

The pressure loss through the PVB is generally higher than for the AVB because of the spring-loaded components. The curve in fig. 12.2 shows the initial pressure loss to be about 2 lb/in.^{2} for this particular model.

The PVB in figure 12.6 provides additional features to allow in-place testing for proper operation of the device. Two mechanical ball valves serve to isolate the PVB from the supply line and three other smaller valves provide ports for the connection of a test apparatus. Currently, many back-flow prevention devices are supplied with this feature.

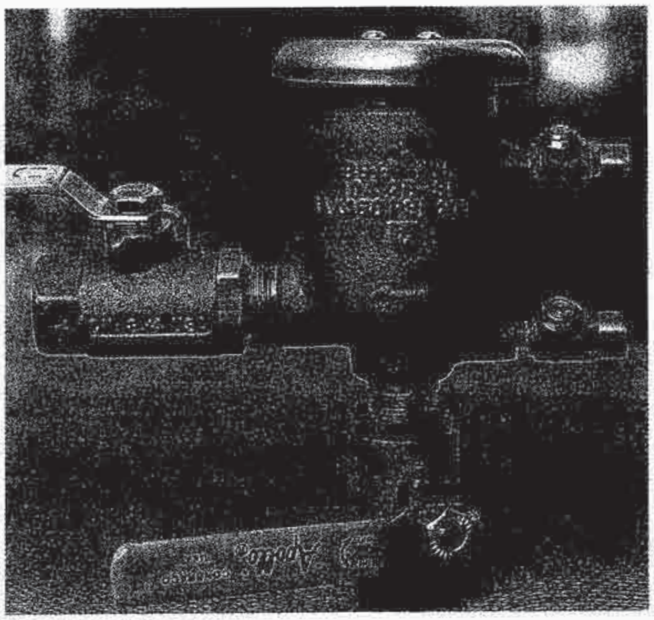

Figure 12.6. Typical pressure vacuum breaker backflow prevention device. (Watts Series 800)

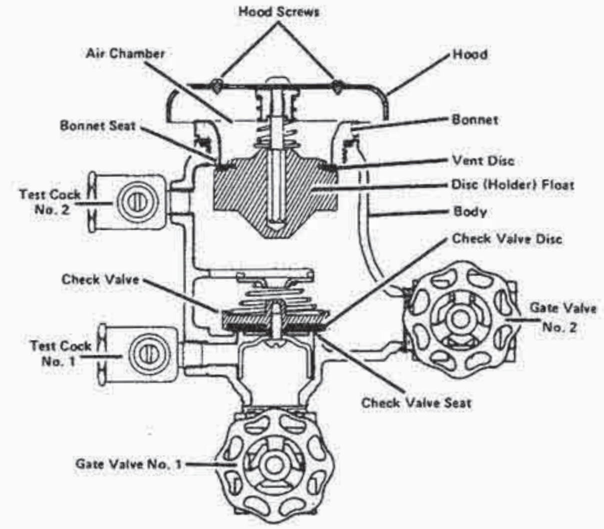

Figure 12.7. Schematic of pressure vacuum breaker.
(Source: ***Backflow prevention devices.*** **North Andover, Mass.: Watts Regulator Co.)**

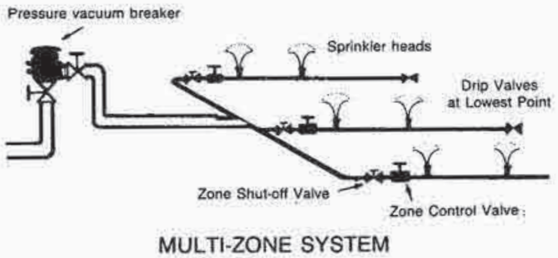

Figure 12.8. PVB used in multi-zone irrigation system.
(Source: ***50 Cross-connection questions, answers and illustrations.***
North Andover, Mass.: Watts Regulator Co.)

Double Check Valve (DC). The double check valve (fig. 12.10) consists of two spring-loaded check valves connected in series. The DC provides lots of flexibility (table 12.1) for continuous pressure and down-stream control valves minus the elevation requirement. The DC, however, is considered a low-hazard device, since both check valves can become fowled without any external indication. Therefore, it cannot be used where there is potential for contaminated water backflow. In many locations, double checks are not acceptable as back-flow prevention devices for irrigation systems. The pressure loss for the DC is generally higher than for the PVB, since the DC has two spring-loaded valves instead of one.

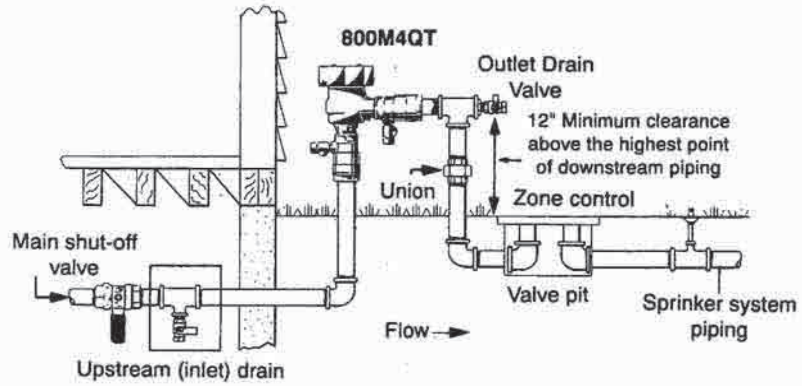

Figure 12.9. Installation schematic for pressure vacuum breaker. (Source: *Backflow prevention products*. North Andover, Mass.: Watts Regulator Co.)

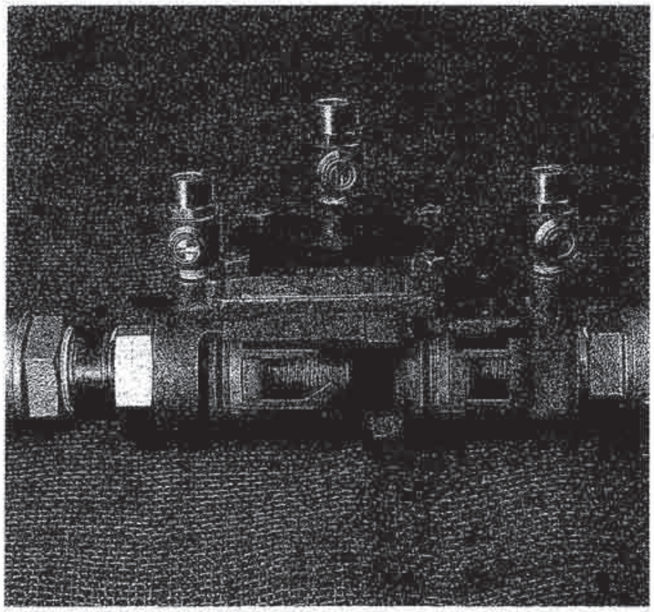

Figure 12.10. Double check backflow prevention devices. (Watts Series 007)

Reduced Pressure (RP) Device. The reduced-pressure backflow prevention device (fig. 12.11) provides the most safety of the devices discussed. It is also the most complicated, expensive, and has the highest pressure loss. It appears to be similar to the double check, and, in fact, it does have two spring-loaded check valves. However, the RP device has additional valves and outlet ports between the two check valves to allow water out and air in under certain potential backflow conditions. Under normal operation, downstream pressure is lower than upstream pressure. This can be observed in the pressure-loss curves in figure 12.2. When upstream pressure drops to zero or is negative

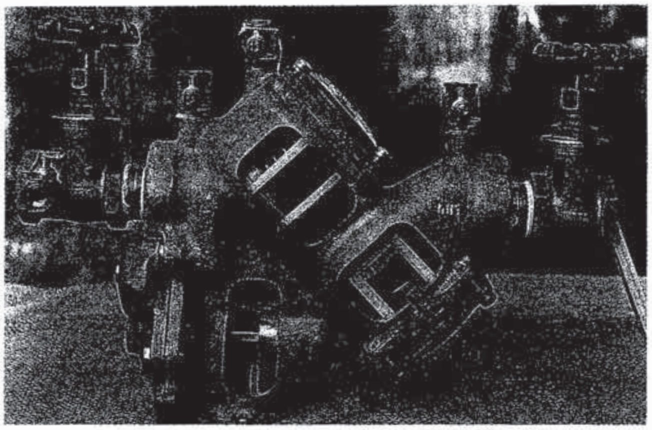

Figure 12.11. Reduced pressure principle backflow prevention device. (Watts 909)

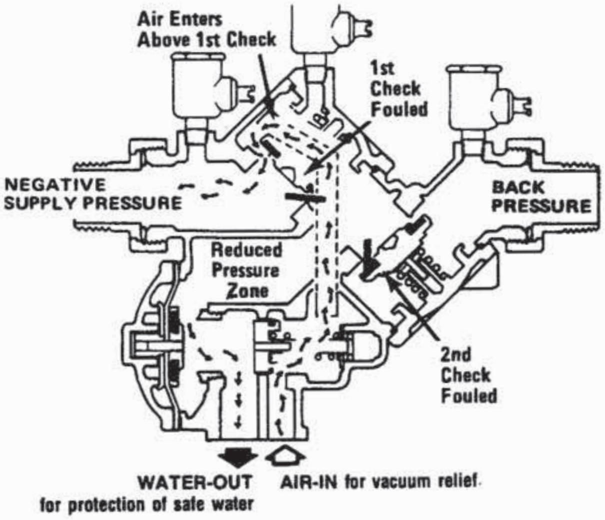

Figure 12.12. Schematic of reduced pressure principle backflow device. (Source: *Backflow prevention products*. North Andover, Mass.: Watts Regulator Co.)

(vacuum), the drain and vent ports open to allow air into the RP device to break siphonage (fig. 12.12). When the downstream check is fowled, downstream water will also be discharged from the device. The RP device (and all others) must be installed to prevent submersion (fig. 12.13) as this will disable the air-inlet and water-outlet feature of the devices.

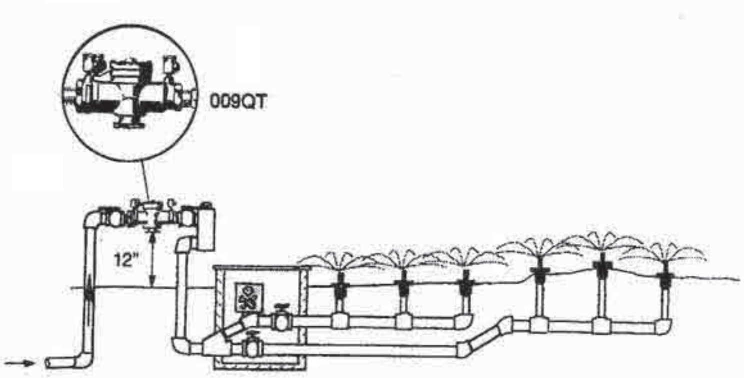

Figure 12.13. Installation schematic for reduced pressure principle backflow device. (Source: *Catalog F-IBPD*, North Andover, Mass.: Watts Regulator Co.)

Freeze Protection

Often backflow devices for irrigation systems are installed at locations subject to freezing temperatures. In some situations (as shown in figure 12.9), upstream drains can be installed at interior locations to provide drainage of the device during freezing conditions. Upstream drains should not be installed, however, in belowground locations as this would be a potential source of contamination and would defeat the purpose of the device. Insulated enclosures may provide adequate protection in some locations.

Chapter 12 Problems

12.1 The POC for an irrigation system is located at the top of a hill. The sprinkler system contains several control valves for the various zones located at the commercial site. The lawn and plants will be maintained professionally including regular spraying. You as designer do not know specifically what chemicals will be used. Specify the most economical and appropriate method to protect from backflow. Justify your answer.

12.2 Determine the pressure loss for a 1-in. PVB with a 15-gal/min flow.

12.3 Specify the appropriate size of backflow preventor to use for a 25-gal/min flow. What would be the possible range of pressure losses incurred for the various backflow devices?

Drip Irrigation 15

In *drip irrigation*, water is applied directly to the soil near the plant at low flows. Usually, the application is at frequent intervals (daily) over long periods of time (hours). With drip irrigation, water exits an emitter at low velocity and enters the soil wetting the plant roots directly under each emitter (fig. 15.1). Only a portion of the total rooting area is actually wetted by the drip emitters in most drip irrigation designs.

Drip irrigation works well for individual shrubs and trees, and is particularly useful in irrigating small, irregularly shaped areas containing shrubs that are bounded by hardscape (fig. 15.2). Many residential and commer-

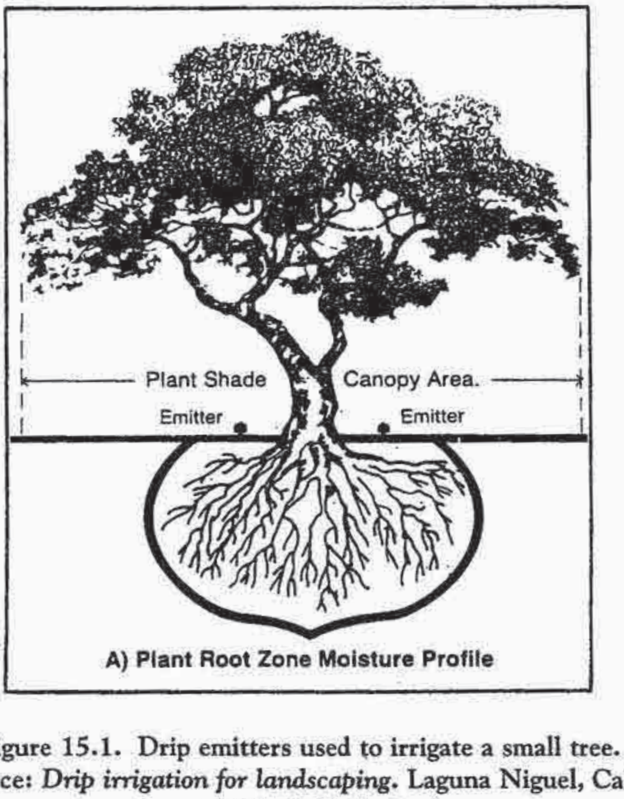

Figure 15.1. Drip emitters used to irrigate a small tree. (Source: *Drip irrigation for landscaping*. Laguna Niguel, Calif.: James Hardie Irrigation)

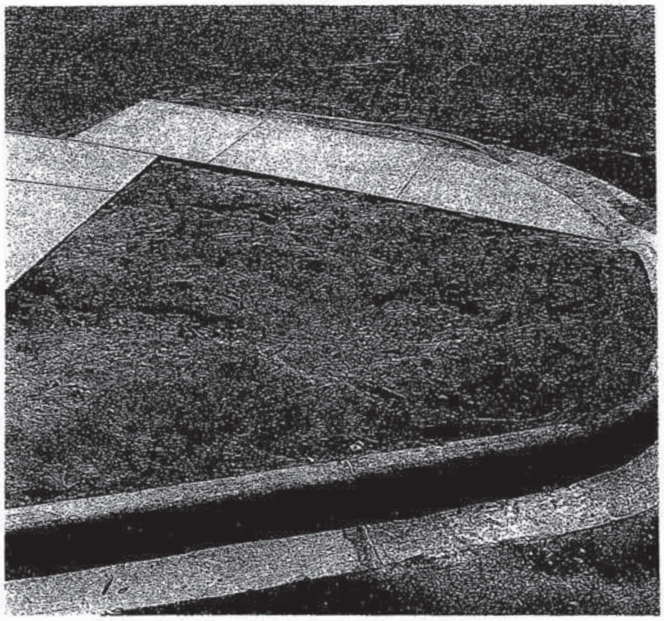

Figure 15.2. Irregularly shaped area bounded by hardscape to be planted with shrubs.

cial irrigation designs include a mixture of sprinkler and drip irrigation, on separate circuits, of course.

Much of the material already covered will also apply to drip. However, this chapter will concentrate on working with lower pressures, so that elevation changes can be of greater concern. In addition, the emitters have smaller-sized outlets compared to sprinklers, so water quality is more important than when we design with sprinklers. The components of a drip system include: 1) the emitter or orifice; 2) laterals and mains; 3) pressure regulation; and 4) filtration. Let's look at these components separately and then we'll develop a step-by-step design procedure.

Emitters

Emitters are the devices that control the amount of water being discharged at a particular point in drip irrigation. There are several ways of mounting emitters to the supply tube. Some emitters are attached to the outside of the supply tubing with a barbed inlet projecting into the tube (fig. 15.3). These are called *on-line emitters*. These same emitters are sometimes installed in centrally located manifolds with small-diameter, "spaghetti" tubing used to distribute water to surrounding plants (fig. 15.4). Usually, on-line emitters are installed at the irrigation site by the irrigation system installer to provide flexibility in placing the emitters. *In-line emitters* are installed by the manufacturer inside the tube. Although in-line emitters allow quick and easy installation, they lack the flexibility of positioning individual emitters.

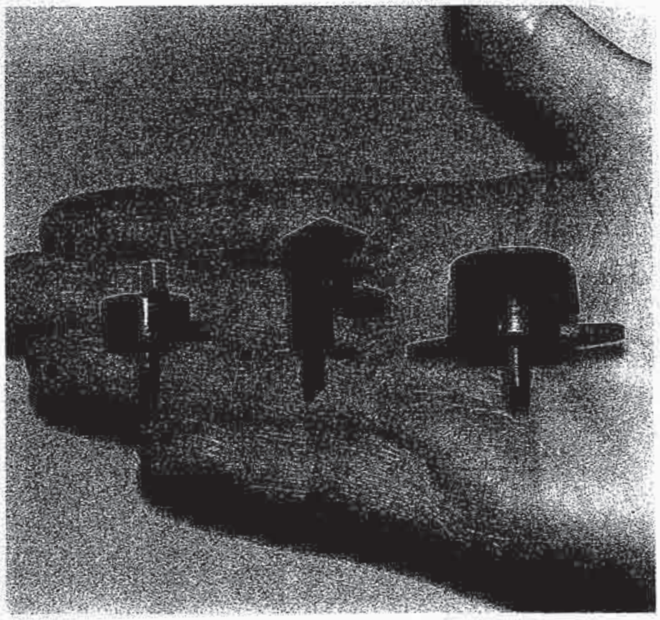

Figure 15.3. Typical on-line emitters. (Left to right: Rain Bird EM, "Lady Bug"; Hardie DBK, "E2"; Hardie DPJ, "Turbo SC")

Figure 15.4. Typical manifold outlet device. (RainBird Xeri-Bird-8)

Another type of emitter system uses a *double-tube* configuration. A large tube acts as a conveyor, supplying water to the smaller, piggyback tube. The smaller tube provides the mechanism to decrease pressure and distribute the water at the desired flow rate (fig. 15.5). Some of these tubes are made of thin-wall

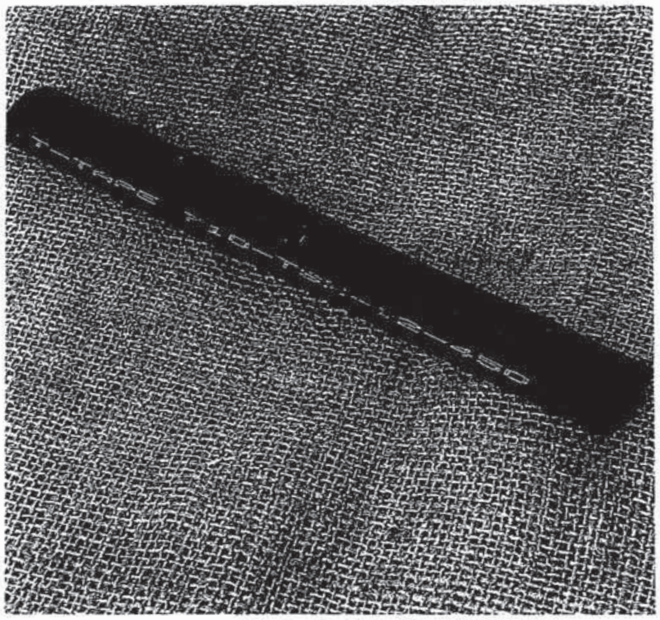

Figure 15.5. Typical double-wall drip tubing (t-tape).

plastic material and are called tape. The thinnest-wall materials are designed to last only one season. Thicker-wall materials, designed to last many years, are also available. These double-tube products are most often used to irrigate long rows of agricultural crops and are less commonly used for landscape irrigation. These products can also be buried, however, offering the potential of subsurface irrigation of ornamental plants, even turf.

As we discussed earlier, emitters are designed to provide water at a desired flow rate. With basic emitters, called *non-pressure compensating emitters*, the flow increases with increasing water pressure (fig. 15.6, EM-L10X, and DBJ 06). Usually, non-pressure compensating emitters are made entirely of rigid plastic without any moving parts. *Laminar-flow emitters* have a long, smooth, spiral flow path (fig. 15.7). The larger, tortuous flow path of the *turbulent flow emitters* requires less filtration.

The flow from *pressure compensating emitters* remains nearly constant as the supply pressure changes (fig. 15.6, XB-10, and DPJ-04). Pressure compensating emitters have an internal mechanism that changes as pressure changes resulting in a more constant discharge from the emitter. One common method is to use a flexible rubber-like diaphragm (fig. 15.7). As inlet pressure increases, the diaphragm is pushed into the slot where water flows. This restricts the cross-sectional area of flow and causes more pressure loss. A well-designed pressure compensating emitter can discharge the same flow over a

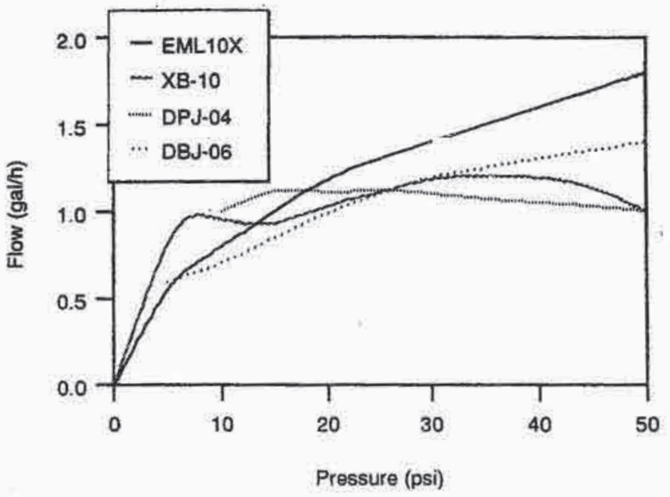

Figure 15.6. **Pressure/flow characteristics for several emitters. (Sources: *Landscape irrigation products catalog*. Glendora, Calif.: RainBird Sprinkler Mfg. Corp.; *Hardie irrigation catalog*. Laguna Niguel, Calif.: James Hardie Irrigation.)**

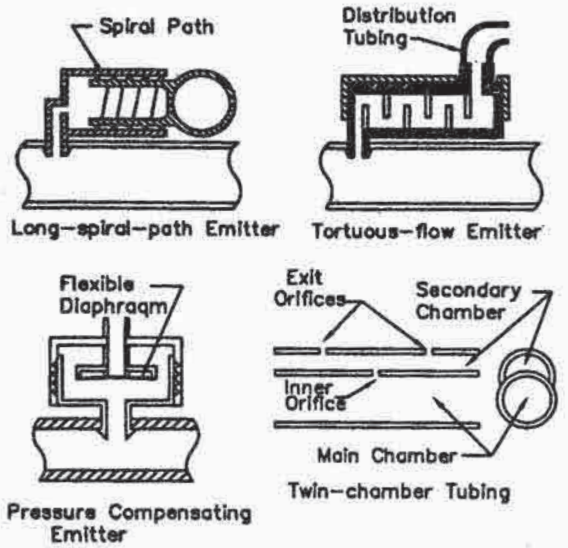

Figure 15.7. Types of drip emitters. (sketches adapted from Keller, J. and R. D. Bliesner. 1990. *Sprinkle and trickle irrigation*. New York: Van Nostrand Reinhold.)

wide range of pressures. This characteristic is desirable when there's a large pressure loss in a long lateral or where there is a sharp change in elevation. Under these conditions, choose a pressure compensating emitter.

When water pressure remains fairly constant in a lateral, the simpler, non-pressure compensating emitter is a good choice. Due to the simplicity in design, however, some landscape irrigation designers are using pressure compensating emitters exclusively even though the cost is higher.

Other features on some emitters, such as a flushing feature with increased water flow at start-up or shutdown, are available. This feature allows debris to be flushed from the emitter at the beginning or end of each irrigation cycle. Some emitters have self-piercing barb (fig. 15.3, left, middle). Requiring no special tool for installation into thin-wall tubing, when used with special installation guns, these emitters can also be installed in thicker-walled tubing. Unfortunately, on thin-walled tubing, the self-piercing emitters can be a problem where foot traffic can force the barb through the opposite wall, causing a leak. Several examples of emitters are listed in table 15.1.

Laterals and Mains

Belowground main lines are usually made of rigid PVC; it stays in place well and is easy to install. In some areas of the U.S., PE hose is used for main lines. It's more flexible than PVC and is less likely to be broken by water freezing inside the pipe during cold weather.

Table 15.1. Example drip emission devices

Model	Nominal Flow (gal/h)	Filtration Requirement (mesh)	Pressure Range (lb/in.^{2})	Pressure Compensation	Mechanism
XB-05*	0.5	200	15 – 50	Yes	Diaphragm
XB-10	1.0	150	15 – 50	Yes	Diaphragm
XB-20	2.0	150	15 – 50	Yes	Diaphragm
PC-05	5	100	10 – 60	Yes	Disc
PC-07	7	100	10 – 60	Yes	Disc
PC-10	10	100	10 – 60	Yes	Disc
PC-12	12	100	10 – 60	Yes	Disc
PC-18	18	100	10 – 60	Yes	Disc
PC-24	24	100	10 – 60	Yes	Disc
EM-L10X	1	100	5 – 50	No	Tortuous path
DPJ02	0.5	150	10 – 50	Yes	Diaphragm
DPJ04	1.0	150	10 – 50	Yes	Diaphragm
DPJ08	2.0	150	10 – 50	Yes	Diaphragm
DBK04	1.0	150	5 – 40	No	Spiral path
DBK06	1.5	150	5 – 40	No	Spiral path
DBK08	2.0	150	5 – 40	No	Spiral path
DBK16	4.0	150	5 – 40	No	Spiral path

* XB, PC, and EM devices are manufactured by RainBird. DPJ and DBK models are manufactured by Hardie.

Sources: *Landscape irrigation products catalog*. 1993–1994. Glendora, Calif.: RainBird Sprinkler Corp. *Hardie irrigation catalog*. 1993. Laguna Niguel, Calif.: James Hardie Irrigation.

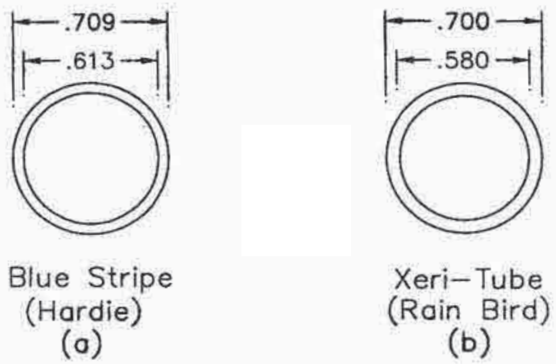

Figure 15.8. Examples of PE tubing used in drip irrigation.

Lateral lines, especially designed for drip, are most often low-pressure PE (although some small diameter, spaghetti tubing is made of vinyl). Drip tube is available in several sizes and wall thicknesses. Two examples are shown in figure 15.8. One of the more common is 1/2 in. {16 mm} diameter, thin-wall tube with a 50 lb/in.^{2} {350 kPa} pressure rating (fig. 15.8a). It uses barbed fittings that are inserted into the tube and has a compression ring on the outside of the tube to help hold the fitting together (fig. 15.9). The tube can be placed above or below the ground surface (fig. 15.11). Since it is thin-walled, however, it is subject to mechanical damage—a problem in areas subject to regular digging such as annual planting beds. Thicker-walled tubing is also avail-

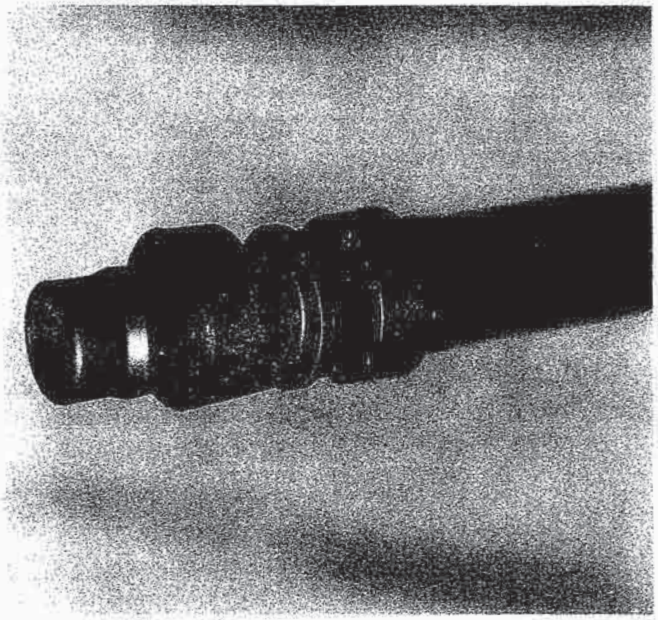

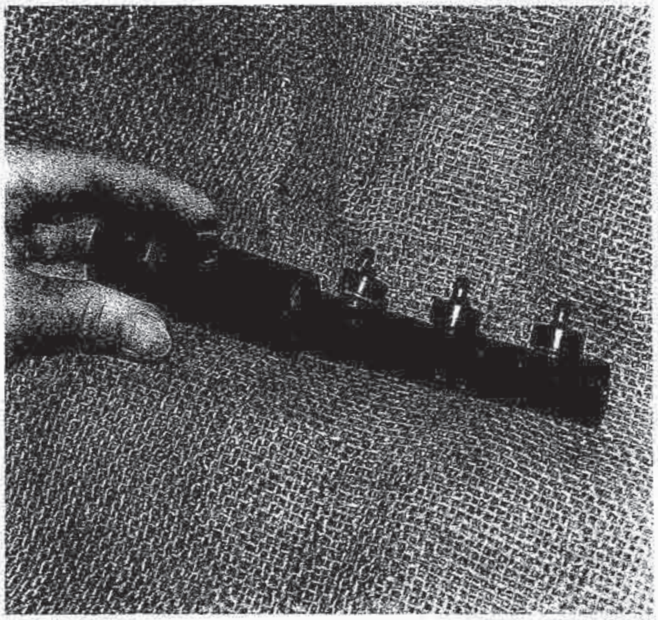

Figure 15.10. Thick-wall drip tubing. (RainBird Xeri-tube)

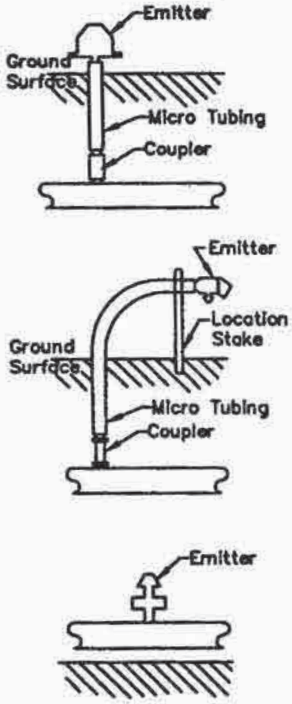

Figure 15.11. Typical emitter installations below and aboveground. (Belowground drawings adapted from *Drip irrigation for landscape. An introductory guide.* 1986. Laguna Niguel, Calif.: James Hardie Irrigation.).

able. Although it costs more, this type of tubing is more resistant to mechanical damage (fig. 15.8b). Thicker-walled tubing generally uses compression-type connectors (fig. 15.10) that fit inside the tubing instead of outside as with the thin wall-tubing. Because of the additional thickness and strength of the thick-wall tubing, special tools may be required to install the emitters.

Typical Drip System Valve Station

In addition to mains, laterals, and emitters, we also need pressure regulation, control valves, and filters (fig. 15.12). Since these items were discussed earlier, it should be relatively easy to select each item.

Fixed-pressure regulators, discussed in chapter 9, are usually the preferred method of obtaining down-stream regulation. The primary factors are filtration (mesh size), capacity, and pressure loss. A screen/filter can be chosen from the limited selection provided in chapter 9 and should be adequate for city water which is relatively clean and has been chemically treated.

The primary factor in selecting the valve size and model is flow. Be sure to select a valve that has the proper recommended flow. When either too low or too high, the valve may not work or may have excessively high pressure loss. For examples in this text, you can probably find an acceptable valve listed in chapter 9. Of course, there is a much broader choice available for your actual designs.

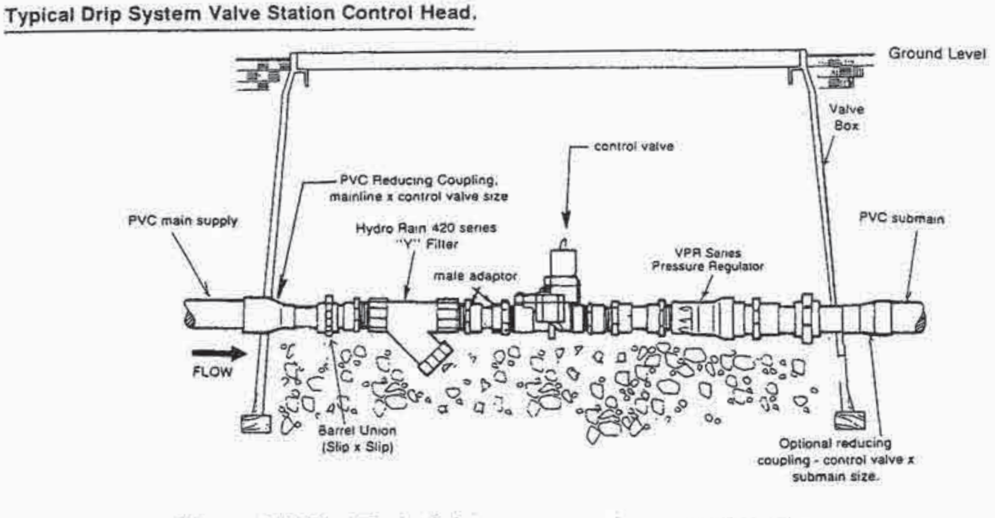

Figure 15.12. Typical drip system valve control station. (Source: *Drip irrigation for landscaping. An introductory guide*. 1986. Laguna Niguel, Calif.: James Hardie Irrigation.)

Design Steps

Most drip irrigation equipment manufacturers provide design guides and tables to help you through the design procedure. These guides are usually keyed to a manufacturer's particular products and makes them useful if you are planning to use their products. However, if you are mixing brands or specifying optional brands, the manufacturer's guides are less useful. Another confusing factor is the variability of data between sources. For example, estimated ground cover water-use may vary significantly depending on where you obtain your data. When dealing with either a new product or a new situation, it's a good idea to be conservative in your design. If you have conflicting data, choose the most conservative value. As you gain experience with the product or situation, you can become less conservative in your approach. Of course, you can experiment with the product or situation as time and money allow.

It's important to have an organized approach to the design process. The following approach is one that I have developed after reviewing a couple of manufacturer design procedures (RainBird, 1994; Hardie, 1986). Assume that you have collected your on-site data, made your drawings, and you are now ready for the design process. There are seven basic steps:

1. Water required per day per plant
2. Quantity of emitters per plant
3. Irrigation interval
4. Volume to apply
5. Run time
6. Pipe hydraulics
7. Ancillary equipment

We'll keep the process relatively simple to begin with and you can add detail to the process as required for your more complicated designs.

Probably, the simplest and most desirable situation would be to have a drip line with all plants of the same variety and size. In fact, this usually happens in crop production, but unfortunately rarely happens in landscape designs. When you are planning to have drip lines for several plant varieties and sizes, it's helpful to design for the predominant plant, sometimes called the *base plant*. Adjustments for other plants can be made as needed. You may also find subtle differences in the design process between using individual emitters that can be installed on-site, and in-line emitters installed by the manufacturer with restricted set spacings. In the latter case, though, additional emitters can be incorporated where additional water is required.

Now let's take a closer look at the design process using an example to make the process clearer.

Example 15.1

Plantings:	20 dwarf azaleas 18 in. canopy 18 in. spacing
Location:	Auburn, Ala.
Soil texture:	Medium
Slope:	Flat
Water Supply:	City Water 20 gal/min @ 65 psi
Controller:	Electrically actuated valves

We'll follow the general steps as outlined previously.

Step 1 Water Requirement

A. Potential Evapotranspiration (PET) (table 6.4)
Based on the temperatures and humidity ranges given in table 6.4, this is a warm, humid climate with a

$$PET = 0.3 \text{ in./day}$$

B. Plant Factor (table 6.5)
Checking table 6.5 for native plants in a humid area, we select:

$$\text{Plant factor} = 0.7$$

C. Plant Area (Compute or table 15.3)

$$\text{Plant area} = \pi\,(\text{canopy diameter})^2/4$$

$$= \pi\,(1.5 \text{ ft})^2/4$$

$$= 1.77 \text{ ft}^2$$

D. Irrigation Efficiency (table 6.6)
For a warm climate we find:

$$\text{Irrigation efficiency} = 0.90$$

E. Plant Water Application (eq. 15.1)

$$\begin{aligned}\text{Plant water application} &= \frac{(\text{plant area})(\text{PET})(\text{plant factor})}{\text{irrigation efficiency}} \\ &= \frac{(1.77\ \text{ft}^2)(0.3\ \text{in.}/\text{day})(0.7)}{0.9} \\ &\times\left(\frac{1\ \text{ft}}{12\ \text{in.}}\right)\left(\frac{7.48\ \text{gal}}{1\ \text{ft}^3}\right) \\ &= 0.26\ \text{gal}/\text{day} \qquad 15.1\end{aligned}$$

Step 2 Quantity of Emitters per Plant

A. Emitter Flow (table 15.2)
We can choose 1/2, 1, or 2 gal/h emitters. I generally choose 1 gal/h emitters unless there is a special need for lower or higher flows. Therefore,

Emitter flow = 1 gal/h

B. Minimum Desired Water Depth
From table 15.2, we choose a minimum wetting depth of 9 in. since our shrub is shallow-rooted.

C. Recommended Emitter Spacing (table 15.3)
For a medium soil and a 9-in. watering depth, table 15.3 recommends an emitter spacing of 18 in.

D. Number of Emitters per Plant

$$\begin{aligned}\frac{\text{Emitters}}{\text{Plant}} &= \frac{(\%\ \text{area wetted})(\text{plant area})}{\text{area wetted per emitter}} \\ &= \frac{(0.5)(1.77\ \text{ft}^2)}{1.8\ \text{ft}^2} \\ &= 0.49 \qquad 15.2\end{aligned}$$

We could use one emitter for every two plants, but emitter positioning would probably mean some wasted water. Therefore, let's use one emitter per plant.

C. Moisture Depletion

We can choose to remove all available water from the root zone before we irrigate. This results in the longest irrigation interval, and in areas with rain, provides the greatest opportunity for rain to provide the needed moisture. Unexpected problems or inaccurate computations may result in unplanned plant stress, however. Therefore, the accepted procedure is to irrigate prior to removing all the available moisture from the soil profile. The amount left can vary with each situation and designer. One reasonable value, the one we will use, is to leave 1/2 of the moisture in the soil profile.

$$\text{Moisture Depletion (MAD)} = 0.5.$$

D. Daily Water Usage

Previously, the potential evapotranspiration, PET, value was determined to be 0.3 in./day and the Plant Factor, PF, to be 0.7. Below the two values are combined to determine water usage in inches per day:

$$(\text{PET})(\text{PF}) = (0.3 \text{ in./day})(0.7) = 0.21 \text{ in./day.}$$

E. Computing Irrigation Interval (eq. 6.3)

Use equation 6.3 to determine the irrigation interval:

$$\begin{aligned}\text{Irrigation interval} &= \frac{[\text{available water}][\text{MAD}]}{\text{usage / day}} \\ &= \frac{[\text{water / ft}][\text{root depth}][\text{MAD}]}{[\text{usage / day}]} \\ &= \frac{[2 \text{ in. / ft}][0.75 \text{ ft}]\,0.5}{[0.26 \text{ in. / day}]} \\ &= 2.9 \text{ days}\end{aligned}$$

Keeping in mind the capability of our controller, plant response, disease potential, and consumer desires, choose any interval up to 2.9 days. Some may choose to irrigate daily, while others may prefer a longer interval. Let's choose to irrigate every 2 days:

$$\text{Irrigation Interval} = 2 \text{ days}$$

Table 15.2. Minimum recommended watering depths

Base Plant	Root Depth (in.)	Minimum Watering Depth (in.)
Groundcover	12 – 18	6 – 9
Shrubs	18 – 36	9 – 18

Source: *Low-volume landscape irrigation design manual.* 1994. Glendora, Calif.: Contractor Division, RainBird Sales Inc.

Table 15.3. Recommended emitter spacing

Soil Type	Minimum Desired Watering Depth (in.)	Emitter Spacing (in.)	Wetted Area (ft^2)
Coarse	6	Use sprays	
	12	12	0.8
	18	18	1.8
	24	24	3.1
Medium	6	12	0.8
	9	18	1.8
	12	24	3.1
	18	36	7.1
Fine	6	24	3.1
	9	36	7.1
	12	48	12.6

Source: *Low-volume landscape irrigation design manual.* nd. Table 5-4. Glendora, Calif.: Contractor Division, RainBird Sales Inc.

Step 3 Irrigation Interval (eq. 6.3)

A. Rooting Depth/Watering Depth (table 15.2).
We have already selected the watering depth to be 9 in. Our irrigation interval needs to be based on that value:

Watering depth = 9 in.

B. Soil Water-holding Capacity (table 6.3)
Reviewing table 6.3 for a medium textured soil we find:

Water-holding capacity = 2 in./ft

Step 4 Volume to Apply (eq. 15.3)

Compute the volume of water to apply by multiplying the irrigation interval by the daily usage:

$$\text{Volume} = \left(\frac{(\text{usage / day})(\text{irrigation interval})}{\text{efficiency}}\right)$$
$$= \frac{(0.26\ \text{gal / day})(2\ \text{days})}{0.9}$$
$$= 0.6\ \text{gal / application} \qquad 15.3$$

Step 5 Run Time

Compute the time required to apply water by using equation 15.4:

$$\text{Run time} = \frac{(\text{volume to apply})}{(\text{no. of emitters})(\text{flow / emitter})}$$
$$= \frac{0.6\ \text{gal}}{(1)(1\ \text{gal / h})}$$
$$= 0.6\ \text{h} \qquad 15.4$$

Our run time is about 36 min.

Step 6 Pipe Hydraulics

This is a good location to use in-line emitters. There is a constant spacing with uniform plantings. In this example, let's examine the possibility of using 0.58 in. ID tubing with the required 1 gal/h emitters spaced at 18 in. intervals. Use the in-line pressure compensating emitters described in table 15.4. Since there are only 20 plants, our flow is 20 gal/h and our hose length is 30 ft. Providing 20 psi at the hose entrance will be adequate.

Step 7 Ancillary Equipment

To finish up the design we need to specify pressure regulation, filtration, and a diaphragm valve.

A. Pressure Regulation

Pressure compensating emitters will work well in the 10 to 60 lb/in.^{2} range. We have already determined that at least 20 lb/in.^{2} at the entrance to the tubing is necessary to have the minimum required pressure at the end of the tubing. The maximum rated pressure for the tubing is 60 lb/in.^{2}. City water pressure will be at least 65 lb/in.^{2} and will likely be higher at certain times. Even though 5 lb/in.^{2} between the POC and the tubing may be lost, a pressure regulator is still necessary. A PMR-20LF or a PMR-20MF (table 9.7) will provide the required pressure. A higher pressure regulator could also be used as long as it has a regulated pressure of 60 lb/in.^{2} or lower.

B. Filtration

According to manufacturer specifications, the in-line tubing requires 150 mesh filtration. The 3/4 in. wye screen described in table 9.6 will provide adequate filtration with no significant pressure loss.

C. Diaphragm Valve

The flow into this zone will be 1/3 gal/min. Such a low flow could be a problem and would require careful investigation of available valves. Later, we will add more plants to this zone and increase the flow. For now, though, let's look at the pressure required assuming the 1 in. valve in table 9.4 with the pressure loss at 2 gal/min.

D. Total Required Pressure

We can now compute the total required pressure and compare it with the available pressure:

@ entrance to hose	20
pressure loss in regulator	5
pressure loss in screen	0
pressure loss in valve	2
total required pressure	27 lb/in.^{2}

As the screen becomes clogged with debris, the pressure loss will increase, so we probably should replace the 0 with a 5. Even so, the pressure requirement is only 32 lb/in.^{2}—well below the 65 lb/in.^{2} city water supply.

Table 15.4. Maximum length of Xeri-tube PC on flat land*

Pressure at First Emitter (psi)	Emitter Spacing†											
	12 in.			18 in.			24 in.			36 in.		
	0.5	1.0 (gal/h)	2.0	0.5	1.0 (gal/h)	2.0 (ft)	0.5	1.0 (gal/h)	2.0	0.5	1.0 (gal/h)	2.0
20	250	200	100	325	250	130	500	300	160	500	450	300
30	300	240	150	450	315	165	500	400	200	500	500	400
40	350	275	160	500	350	200	500	500	250	500	500	450
50	400	300	190	500	400	225	500	500	275	500	500	500
60	450	325	200	500	410	250	500	500	300	500	500	500

* Minimum operating pressure for tubing is 10 lb/in.^{2}.

† Filtration requirements: 0.5 gal/h emitter – 200 mesh, 1 gal/h emitter – 150 mesh, 2 gal/h emitter – 100 mesh.

Source: *Landscape low-volume irrigation design manual.* 1994. Table 9.4. Technical flier. Glendora, Calif.: RainBird Sales.

Mixed Plantings

As we mentioned earlier, the plants in an ideal design are in a single zone with similar water requirements, allowing the same size and number of emitters and the same run time. Unfortunately, this doesn't happen in the real world. Ornamental landscape includes an intermingled mixture of plant varieties and sizes. Placing plants with similar water requirements on individual zones would not only be expensive but would require an unacceptable maze of irrigation hardware. The alternative, then, is to place these varied plants on a shared zone and make adjustments in flow and positioning to accommodate various plant needs.

In a design which includes mixed plantings, the run time is fixed by designing the zone for the base plantings, the predominate plants, or alternately, the plants with the smallest water requirement. Other plantings are accommodated by modifying the number, size, and position of the emitters. Not only are emitters placed at the soil surface, but emitter outlets can also be placed below the surface to provide deep watering (RainBird, 1994; Hung and Koo, 1993; and Hung, 1994). Let's look at an example of a mixed-planting irrigation zone by adding some larger azaleas to the previous example.

Example 15.2

Add 20, large, 4-ft diameter, growing azaleas to the zone in the previous example. We will follow the previous steps as much as possible—with a few new restrictions. We must irrigate these larger plants in a 36-min interval every two days. It would also be helpful to use the same tubing, emitters, and spacing.

Repeat Step 1

C. Plant Area

$$\text{Plant area} = \frac{\pi\,(\text{canopy diameter})^2}{4}$$

$$= \frac{\pi\,(4\ \text{ft})^2}{4}$$

$$= 12.6\ \text{ft}^2$$

E. Plant Water Application

$$\text{plant water application} = \frac{(\text{plant area})(\text{PET})(\text{plant factor})}{\text{irrigation efficiency}}$$

$$= \frac{(12.6\ \text{ft})^2(0.3\ \text{in.}/\text{day})(0.7)}{0.9}$$

$$\times \left(\frac{1\ \text{ft}}{12\ \text{in.}}\right)\left(\frac{7.48\ \text{gal}}{1\ \text{ft}^3}\right)$$

$$= 1.83\ \text{gal}/\text{day}$$

Repeat Step 2

B. Watering Depth

Since these are larger plants, we might want to water some deeper, but for now let's just plan to water at the same 9-in. depth.

D. Number of Emitters per Plant

$$\frac{\text{Emitters}}{\text{Plant}} = \frac{(\%\text{ area wetted})(\text{plant area})}{(\text{area wetted per emitter})}$$

$$= \frac{(0.5)(12.6\text{ ft})^2}{1.8\text{ ft}^2}$$

$$= 3.5$$

Based on the wetted area, we will need four emitters. However, four emitters may not provide adequate water during the watering window for this zone. Now let's compute the number of emitters required to provide adequate water.

$$\begin{array}{c}\text{Water needed}\\ \text{per irrigation interval}\end{array} = (\text{water per day})(\text{irrigation interval})$$

$$= (1.83\text{ gal / day})(2\text{ days})$$

$$= 3.66\text{ gal}$$

Based on strict rules, we should use seven emitters, but here we'll claim designer's liberty and use only six. Our final layout might have four emitters in a square, 18-in. spacing placed symmetrically around the shrub, with two additional add-ons. The two add-ons could use spaghetti tubing to discharge water below-ground for deeper wetting.

Chapter 15 Problems

15.1 What is the daily water need in gallons for a new planting of a native plant located in a moderately dry climate? The canopy diameter for the plant is 3.5 ft.

15.2 Find the weekly water need in gallons for a ground cover located in Raleigh, North Carolina. The rectangular bed is 20 ft wide × 30 ft long.

15.3 A plant requires 2.7 gal/day and is irrigated twice a week for 4 h each irrigation. How many 1 gph emitters would be required for the plant? Assume an irrigation efficiency of 80%.

15.4 A home owner has a long row of azaleas that are spaced 3 ft apart. Plans are to use Xeri-Tube PC inline drip tubing with 1 gph emitter per bush. Approximately how many plants can be irrigated if the inlet pressure is 20 lb/in.^{2}? How many plants could be irrigated if a second, 1 gph emitter was added manually at each plant? Justify your answer.

15.5 A rectangular area, 5 ft × 7 ft has been planted in groundcover on an 18 in. spacing. The soil is medium textured and the irrigation efficiency is 85%. Pre-installed drip irrigation emitters (Xeri-Tube PC) are to be used. The bed is part of a larger drip zone. The zone will be operated three times per week for 110 min/irrigation. The PET for the area is 0.25 in./day. Recommend an emitter system to be used.

Table 1. PVC pipe capacity based on 5 ft/s maximum velocity.

Size (in.)	Schedule 40 (gal/min)	Class 200 (gal/min)	Class 160 (gal/min)
¾	1 – 8	1 – 10	-
1	9 – 13	11 – 17	1 – 17
1 ¼	14 – 23	18 – 27	18 – 28
1 ½	24 – 32	28 – 36	29 – 37
2	33 – 52	37 – 56	38 - 59

Table 2. Pressure loss through globe valves

	Valve Size (in.)				
Flow (gal/min)	½	¾	1	1 ¼	1 ½
	(lb/in.^{2})				
2	0.6				
4	2.2	0.7			
6	4.7	1.5	0.6		
8	7.9	2.5	1.0		
10	12.2	3.8	1.5		
12	17.2	5.3	2.1	0.7	
14	22.8	7.1	2.8	0.9	
16		9.0	3.6	1.2	0.7
18		11.2	4.4	1.5	0.9
20		13.7	5.4	1.9	1.0
22		16.2	6.4	2.2	1.2
24		19.0	7.5	2.6	1.4
26		22.1	8.7	3.0	1.7
28			10.0	3.4	1.9
30			11.3	3.9	2.2
32			12.8	4.4	2.5
34			14.3	4.9	2.7
36			16.0	5.5	3.0
38			17.7	6.1	3.4
40			19.5	6.7	3.7

Source: *RainBird technical data*. 1976. Glendora, California.: RainBird Sprinkler Mfg. Corp.

Table 3. Pressure loss through angle valves

	Valve Size (in.)				
Flow (gal/min)	½	¾	1	1 ¼	1 ½
	(lb/in.^{2})				
2	0.3				
4	1.1	0.4			
6	2.3	0.7	0.3		
8	4.0	1.2	0.5		
10	5.8	1.9	0.7		
12	8.1	2.7	1.0	0.4	
14	10.8	3.5	1.4	0.5	
16		4.5	1.8	0.6	
18		5.6	2.2	0.8	0.4
20		6.8	2.7	0.9	0.5
22		8.5	3.2	1.1	0.6
24		9.9	3.8	1.3	0.7
26		11.5	4.4	1.5	0.8
28			5.0	1.7	1.0
30			5.7	2.0	1.1
32			6.4	2.2	1.2
34			7.2	2.5	1.4
36			8.0	2.8	1.5
38			8.9	3.1	1.7
40			9.7	3.3	1.9

Source: *RainBird technical data*. 1976. Glendora, California.: RainBird Sprinkler Mfg. Corp.

Table 4. Pressure loss in valves and fittings*

Nominal Pipe Sizes	Globe Valve	Angle Valve	Gate Valve	Side Outlet Std. Tee	Run Of Std. Tee	Std. Elbow	45° Elbow	Corporation Valve
¾	22	12	0.5	5	2	3	1	10
1	27	15	0.6	6	2	3	2	9
1 ¼	38	18	0.8	8	3	4	2	13
1 ½	45	22	1.0	10	3	5	2	12
2	58	28	1.2	12	4	6	3	11
2 ½	70	35	1.4	14	5	7	3	-
3	90	45	1.8	18	6	8	4	-

*Equivalent length (ft) of standard steel pipe.

Sources: *Specifications manual/Reference charts*. 1990. Glendora, California.: RainBird Sprinkler Mfg. Corp. Watkins, J. 1987. *Turf irrigation manual*. Appendix table 17. Dallas, TX: Telso Industries.

Table 5. Pressure loss values for typical electrically actuated diaphragm valves

	Valve Size (inches)				
Flow	¾[*]	1[!]	1[!]	1 ½[!]	1 ½[!]
(gal/min)	(lb/in.^{2})				
2		1.9	2.0		
5	2.9	2.2	2.2		
10	3.8	2.3	2.4		
20	5.1	2.5	1.9		
30		5.9	4.1	1.7	1.2
40		9.9	7.3	3.0	1.8
50				4.8	3.0

[*] RainBird DV series.

[!] RainBird PGA series.

Source: *Landscape irrigation products catalog.* 1993-1994. Glendora, California.: RainBird Sprinkler Mfg. Corp.

Table 6. Pressure loss through disc-type water meters

Flow (gal/min)	Meter Size (in.)				
	5/8	¾	1	1 ½	2
	(lb/in.^{2})				
6	1.3	0.56	0.28	0.21	0.13
8	2.3	1.0	0.39	0.29	0.17
10	3.7	1.6	0.55	0.37	0.22
12	5.2	2.2	0.79	0.46	0.27
14	7.3	3.1	1.1	0.55	0.32
16	9.5	4.1	1.4	0.66	0.37
18	12.1	5.2	1.8	0.76	0.42
20	15.0*	6.5	2.2	0.89	0.49
22		7.9	2.7	1.0	0.55
24		9.4	3.3	1.2	0.60
26		11.2	3.9	1.4	0.67
28		13.2	4.6	1.6	0.72
30		15.0*	5.3	1.8	0.79
32			6.1	2.0	0.87
34			6.9	2.2	0.94
36			7.7	2.5	0.99
38			8.7	2.8	1.1
40			9.6	3.1	1.2
50			15.0*	4.9	1.9

*Represents friction loss at maximum safe flow for that meter. Source: RainBird technical data. 1976. Glendora, California.: RainBird Sprinkler Mfg. Corp.

Table 7. Friction loss values for typical ¾ and 1 inch in-line screens*

		Mesh			
Size (in.)	Flow (gal/min)	30	100	150	200
		(lb/in.^{2})			
¾	5	0	0	0	0.5
	10	0	0.5	0.5	0.5
	15	1.8	2.4	2.6	2.9
	20	3.8	5.2	5.4	5.4
	30	9.0	12.0	12.5	13.0
1	5	0	0	0	0
	10	0.5	0.5	0.5	0.5
	15	1.7	2.1	2.2	2.5
	20	3.5	4.7	4.9	4.9
	30	6.4	8.6	8.8	8.8

* Values are for in-line wye filter. Source: *Landscape irrigation products catalog*. 1993-1994. Glendora, California.: RainBird Sprinkler Mfg. Corp.

Table 8. Typical pressure losses through various backflow devices*

Size[!!] (in.)	Flow (gal/min)	Device[!]			
		DC	AVB	PVB	RP
		(lb/in.^{2})			
¾	5	4.4	0.4	3.3	11.2
	10	5.3	1.2	4.5	12.2
1	15	5.9	1.3	2.9	14.3
	20	6.6	2.2	3.0	12.5
1 ¼	25	8.1	1.8	3.0	10.6
	30	11.7	2.6	3.0	10.6
1 ½	35		1.8	3.0	10.0
	40		2.3	3.1	10.0
2	50		0.9	3.5	9.4
	75		1.9	4.4	9.6

[*] Pressure losses are for Watts Regulator Products as reported in Backflow prevention products. North Andover, Mass.: Watts Regulator Company.

[!] DC = dual check series 7.

AVB = atmospheric vacuum breaker series 288A.

PVB = pressure vacuum breaker series 800.

RP = reduced pressure series 909.

[!!] Device size based on maximum velocity of 7.5 ft/s. Backflow prevention products. North Andover, Mass.: Watts Regulator Company.

Table 6. Plant factors to be used with PET

Plant Factor	Plant Type
1.0	Groundcover, annual flower beds, evergreens, perennials, shrubs under 4 ft, vines and fruit-bearing trees.
0.8	Mature shade trees
0.7	Native plants in arid and semi-arid climates (newly planted) ornamental plants, native shrubs in high humidity climates, shrubs over 4 ft.
0.4	Established native plants

Source: *Drip irrigation for landscaping, An introductory guide*. 1986. Laguna Niguel, California.: James Hardie Irrigation.

Table 7. Example drip emission devices

Model	Nominal Flow (gal/h)	Filtration Requirement	Pressure Range (lb/in.^{2})	Pressure Compensation	Mechanism
XB-05*	0.5	200	15 – 50	YES	Diaphragm
XB-10	1.0	150	15 – 50	YES	Diaphragm
XB-20	2.0	150	15 – 50	YES	Diaphragm
PC-05	5	100	10 – 60	YES	Disc
PC-07	7	100	10 – 60	YES	Disc
PC-10	10	100	10 – 60	YES	Disc
PC-12	12	100	10 – 60	YES	Disc
PC-18	18	100	10 – 60	YES	Disc
PC-24	24	100	10 – 60	YES	Disc
EM-L10X	1	100	5 – 50	No	Tortuous Path
DPJ02	0.5	150	10 – 50	YES	Diaphragm
DPJ04	1.0	150	10 – 50	YES	Diaphragm
DPJ08	2.0	150	10 – 50	YES	Diaphragm
DBK04	1.0	150	5 – 40	NO	Spiral Path
DBK06	1.5	150	5 – 40	NO	Spiral Path
DBK08	2.0	150	5 – 40	NO	Spiral Path
DBK16	4.0	150	5 – 40	NO	Spiral Path

* XB, PC, and EM devices are manufactured by RainBird. DPJ and DBK are manufactured by Hardie. Sources: *Landscape irrigation products catalog*. 1993 – 1994. Glendora, California.: RainBird Sprinkler Corp. *Hardie irrigation catalog*. 1993. Laguna Niguel, California.: James Hardie Irrigation.

Table 8. Minimum recommended watering depths.

Base Plant	Root Depth (inches)	Minimum Watering Depth (inches)
Groundcover	12 – 18	6 – 9
Shrubs	18 – 36	9 – 18

Source: *Low-volume landscape irrigation design manual*. 1994. Glendora, California.: Contractor Division, RainBird Sales, Inc.

Table 9. Recommended emitter spacing.

Soil Type	Minimum Desired Watering Depth (in.)	Emitter Spacing (in.)	Wetted Area (ft^2)
Coarse	6	Use sprays	
	12	12	0.8
	18	18	1.8
	24	24	3.1
Medium	6	12	0.8
	9	18	1.8
	12	24	3.1
	18	36	7.1
Fine	6	24	3.1
	9	36	7.1
	12	48	12.6

Source: *Low-volume landscape irrigation design manual*. Nd. Table 5-4. Glendora, California.: Contractor Division, RainBird Sales, Inc.

Table 10. Water-holding capacity of different textured soils

Soil Texture	Water-holding Capacity (in./ft)
Coarse (sands)	1.0
Moderately Course (sandy loams)	1.5
Medium (loams, silt loams)	2.0
(Moderately fine (clay loams)	2.2
Fine (clays)	2.3

Source: Keller, J. and R. D. Bliesner, *Sprinkler and trickle irrigation*. 1990. New York: Van Nostrand Reinhold.

Table 11. Performance data for typical fixed-pressure regulators

Model	Operating Pressure* (lb/in.^2)	Flow Range (gpm)	Inlet Size (NPT)[!] (in.)	Outlet Size (NPT) (in.)
Low Flow				
PMR-6LF	6	0.5 – 5	3/4F[!!]	3/4F
PMR-10LF	10	0.5 – 5	3/4F	3/4F
PMR-12LF	12	0.1 – 8	3/4F	3/4F
PMR-15LF	15	0.1 – 8	3/4F	3/4F
PMR-20LF	20	0.1 – 8	3/4F	3/4F
PMR-25LF	25	0.1 – 8	3/4F	3/4F
PMR-30LF	30	0.1 – 8	3/4F	3/4F
Medium Flow				
PMR-6MF	6	4 – 16	3/4F, 1F, 1M	3/4F, 1F
PMR-10MF	10	4 – 16	3/4F, 1F, 1M	3/4F, 1F
PMR-12MF	12	2 – 20	3/4F, 1F, 1M	3/4F, 1F
PMR-15MF	15	2 – 20	3/4F, 1F, 1M	3/4F, 1F
PMR-20MF	20	2 – 20	3/4F, 1F, 1M	3/4F, 1F
PMR-25MF	25	2 – 20	3/4F, 1F, 1M	3/4F, 1F
PMR-30MF	30	2 – 20	3/4F, 1F, 1M	3/4F, 1F
PMR-35MF	35	2 – 20	3/4F, 1F, 1M	3/4F, 1F
PMR-40MF	40	2 – 20	3/4F, 1F, 1M	3/4F, 1F
PMR-50MF	50	2 – 20	3/4F, 1F, 1M	3/4F, 1F
PMR-60MF	60	2 – 20	3/4F, 1F, 1M	3/4F, 1F
High Flow				
PR-10HF	10	10 – 32	1 1/4F	1F
PR-15HF	15	10 – 32	1 1/4F	1F
PR-20HF	20	10 – 32	1 1/4F	1F
PR-25HF	25	10 – 32	1 1/4F	1F
PR-30HF	30	10 – 32	1 1/4F	1F
PR-40HF	40	10 – 32	1 1/4F	1F
PR-50HF	50	10 – 32	1 1/4F	1F

* Actual regulation pressure is ±6% of nominal pressure. For decreasing inlet pressure, deduct 0.5 lb/in.^2.

! NPT = national pipe thread (standard pip threads used in the U.S.)

!! F,M = female and male pipe threads.

Source: *Performance curves*. Orlando, Florida.: Senninger Irrigation, Inc.

Table 12. Friction loss values for typical ¾ and 1 inch in-line screens*

		Mesh			
Size (in.)	Flow (gal/min)	30	100	150	200
		(lb/in.^{2})			
¾	5	0	0	0	0.5
	10	0	0.5	0.5	0.5
	15	1.8	2.4	2.6	2.9
	20	3.8	5.2	5.4	5.4
	30	9.0	12.0	12.5	13.0
1	5	0	0	0	0
	10	0.5	0.5	0.5	0.5
	15	1.7	2.1	2.2	2.5
	20	3.5	4.7	4.9	4.9
	30	6.4	8.6	8.8	8.8

* Values are for in-line wye filter. Source: *Landscape irrigation products catalog*. 1993-1994. Glendora, California.: RainBird Sprinkler Mfg. Corp.

Table 13. Pressure loss values for typical electrically actuated diaphragm valves

	Valve Size (inches)				
Flow (gal/min)	¾[*]	1[!]	1[!]	1 ½[!]	1 ½[!]
	(lb/in.^{2})				
2		1.9	2.0		
5	2.9	2.2	2.2		
10	3.8	2.3	2.4		
20	5.1	2.5	1.9		
30		5.9	4.1	1.7	1.2
40		9.9	7.3	3.0	1.8
50				4.8	3.0

[*] RainBird DV series.

[!] RainBird PGA series.

Source: *Landscape irrigation products catalog*. 1993-1994. Glendora, California.: RainBird Sprinkler Mfg. Corp.

Table 14. Friction Loss, psi/100 ft, of PE Pipe

Size (in)	Xeri-Tube 700		Hardie 16 mm		Hardie	
A (sq in)	0.264		0.295		0.515	
OD (in)	0.700		0.709		0.930	
ID (in)	0.580		0.613		0.810	
Flow	Velocity	Loss	Velocity	Loss	Velocity	Loss
Gal/h	Ft/s	Psi	Ft/s	Psi	Ft/s	Psi
10	0.20	0.08	0.18	0.06	0.10	0.02
20	0.41	0.26	0.36	0.20	0.21	0.05
30	0.61	0.52	0.54	0.40	0.31	0.11
40	0.81	0.87	0.73	0.67	0.41	0.18
50	1.01	1.28	0.91	0.99	0.52	0.26
60	1.22	1.76	1.09	1.36	0.62	0.36
70	1.42	2.31	1.27	1.78	0.73	0.47
80	1.62	2.92	1.45	2.24	0.83	0.60
90	1.82	3.59	1.63	2.76	0.93	0.73
100	2.03	4.31	1.81	3.32	1.04	0.88

Notes: Use caution with velocity over 5 ft/s.

Notes: Darcy Wiesbach Equation @ 20 degrees C.

Notes: a = inside area, OD – outside diameter, ID = inside diameter

Table 15. Friction Loss, psi/100 ft, Schedule 40 PVC Pipe

Size	½"		¾"		1"		1-1/4"		1-1/2"	
OD	0.840		1.050		1.315		1.660		1.900	
ID	0.622		0.824		1.049		1.380		1.610	
Wall Thick	0.109		0.113		0.133		0.140		0.145	
C	140		142		145		147		148	
Flow Gpm	Vel. Fps	Loss psi/100	Vel. Fps	Loss psi/100	Vel. Fps	Loss psi/100	Vel. Fps	Loss psi/100	Vel. Fps	Loss psi/100
1	1.05	0.49	0.60	0.12	0.37	0.04	0.21	0.01	0.16	0.00
2	2.11	1.76	1.20	0.44	0.74	0.13	0.43	0.03	0.31	0.02
3	3.16	3.73	1.80	0.92	1.11	0.27	0.64	0.07	0.47	0.03
4	4.22	6.35	2.40	1.57	1.48	0.47	0.86	0.12	0.63	0.06
5	5.27	9.60	3.00	2.38	1.85	0.71	1.07	0.18	0.79	0.08
6	6.33	13.46	3.61	3.34	2.22	0.99	1.29	0.25	0.94	0.12
7	7.38	17.91	4.21	4.44	2.60	1.32	1.50	0.34	1.10	0.16
8	8.44	22.93	4.81	5.69	2.97	1.69	1.71	0.43	1.26	0.20
9	9.49	28.52	5.41	7.07	3.34	2.10	1.93	0.54	1.42	0.25
10	10.55	34.67	6.01	8.59	3.71	2.55	2.14	0.66	1.57	0.31
11	11.60	41.36	6.61	10.25	4.08	3.05	2.36	0.78	1.73	0.36
12	12.65	48.60	7.21	12.05	4.45	3.58	2.57	0.92	1.89	0.43
14	14.76	64.65	8.41	16.03	5.19	4.76	3.00	1.22	2.20	0.57
16	16.87	82.79	9.61	20.52	5.93	6.10	3.43	1.57	2.52	0.73
18	18.98	102.97	10.82	25.53	6.67	7.59	3.86	1.95	2.83	0.91
20	21.09	125.16	12.02	31.03	7.42	9.22	4.28	2.37	3.15	1.10
22			13.22	37.02	8.16	11.00	4.71	2.82	3.46	1.32
24			14.42	43.49	8.90	12.92	5.14	3.32	3.78	1.55
26			15.62	50.44	9.64	14.99	5.57	3.85	4.09	1.79
28			16.83	57.86	10.38	17.19	6.00	4.41	4.41	2.06

Note: Shaded areas of chart indicate velocities over 5 feet per second. Use with caution.

Table 16. Friction Loss, psi/100 ft, Class 200 PVC Pipe

Size	½"		¾"		1"		1-1/4"		1-1/2"	
OD	0.840		1.050		1.315		1.660		1.900	
ID	0.716		0.930		1.189		1.502		1.720	
Wall Thick	0.062		0.060		0.063		0.079		0.090	
C	140		142		145		147		148	
Flow	Vel.	Loss	Vel.	Loss	Vel.	Loss	Vel.	Loss	Vel.	Loss
Gpm	Fps	psi/100	Fps	psi/100	Fps	psi/100	Fps	psi/100	Fps	psi/100
1	0.80	0.25	0.47	0.07	0.29	0.02	0.18	0.01	0.14	0.00
2	1.59	0.89	0.94	0.24	0.58	0.07	0.36	0.02	0.28	0.01
3	2.39	1.88	1.42	0.51	0.87	0.15	0.54	0.05	0.41	0.02
4	3.18	3.20	1.89	0.87	1.15	0.25	0.72	0.08	0.55	0.04
5	3.98	4.84	2.36	1.32	1.44	0.38	0.90	0.12	0.69	0.06
6	4.78	6.79	2.83	1.85	1.73	0.54	1.09	0.17	0.83	0.09
7	5.57	9.03	3.30	2.46	2.02	0.72	1.27	0.22	0.97	0.11
8	6.37	11.56	3.77	3.16	2.31	0.92	1.45	0.29	1.10	0.15
9	7.16	14.38	4.25	3.92	2.60	1.14	1.63	0.36	1.24	0.18
10	7.96	17.48	4.72	4.77	2.89	1.39	1.81	0.43	1.38	0.22
11	8.75	20.85	5.19	5.69	3.17	1.66	1.99	0.52	1.52	0.26
12	9.55	24.50	5.66	6.69	3.46	1.95	2.17	0.61	1.65	0.31
14	11.14	32.60	6.60	8.89	4.04	2.59	2.53	0.81	1.93	0.41
16	12.73	41.74	7.55	11.39	4.62	3.32	2.89	1.04	2.21	0.53
18	14.33	51.92	8.49	14.17	5.19	4.12	3.26	1.29	2.48	0.66
20	15.92	63.10	9.43	17.22	5.77	5.01	3.62	1.57	2.76	0.80
22	17.51	75.28	10.38	20.54	6.35	5.98	3.98	1.87	3.03	0.95
24	19.10	88.45	11.32	24.14	6.93	7.02	4.34	2.20	3.31	1.12
26			12.27	27.99	7.50	8.15	4.70	2.55	3.59	1.30
28			13.21	32.11	8.08	9.35	5.06	2.92	3.86	1.49

Note: Shaded areas of chart indicate velocities over 5 feet per second. Use with caution.

Table 17. Maximum length of Xeri-tube PC on flat land*

Pressure At First Emitter (psi)	Emitter Spacing[!]											
	12 in.			18 in.			24 in.			36 in.		
	0.5	1.0	2.0	0.5	1.0	2.0	0.5	1.0	2.0	0.5	1.0	2.0
	(gal/h)			(gal/h)			(gal/h)			(gal/h)		
	(ft)											
20	250	200	100	325	250	130	500	300	160	500	450	300
30	300	240	150	450	315	165	500	400	200	500	500	400
40	350	275	160	500	350	200	500	500	250	500	500	450
50	400	300	190	500	400	225	500	500	275	500	500	500
60	450	325	200	500	410	250	500	500	300	500	500	500

* Minimum operating pressure for tubing is 10 lb/in.^{2}.

! Filtration requirements: 0.5 gal/h emitter – 200 mesh, 1 gal/h emitter – 150 mesh, 2 gal/h emitter – 100 mesh.

Source: *Landscape low-volume irrigation design manual*. 1994. Table 9.4. Technical flier. Glendora, California.: Rain Bird Sales.

Table C3 Frictional Loss, psi / 100 ft, of PVC Plastic Pipe - Sched. 40

Notes: Hazen Williams Coefficient (C) = 150, a =inside area, OD = outside diameter, ID = inside diameter, use caution with vel. over 5 ft / sec.

Size (in)	0.75		1.00		1.25		1.60		2.00		2.50		3.00		Size (in)
a (sq in)	0.53		0.86		1.49		2.03		3.35		4.79		7.39		a (sq in)
OD (in)	1.050		1.315		1.660		1.900		2.375		2.875		3.500		OD (in)
ID (in)	0.824		1.049		1.380		1.610		2.067		2.469		3.068		ID (in)
FLOW gal/min	velocity ft/s	loss psi	velocity ft/s	loss psi	velocity ft/s	loss psi	velocity ft/s	loss psi	velocity ft/s	loss psi	velocity ft/s	loss psi	velocity ft/s	loss psi	FLOW gal/min
1	0.6	0.11	0.4	0.03	0.2	0.01	0.2	0.00							1
2	1.2	0.39	0.7	0.12	0.4	0.03	0.3	0.02	0.2	0.00					2
3	1.8	0.83	1.1	0.26	0.6	0.07	0.5	0.03	0.3	0.01	0.2	0.00			3
4	2.4	1.42	1.5	0.44	0.8	0.12	0.6	0.05	0.4	0.02	0.3	0.01			4
5	3.0	2.15	1.9	0.66	1.1	0.17	0.8	0.08	0.5	0.02	0.3	0.01			5
6	3.6	3.01	2.2	0.93	1.3	0.25	0.9	0.12	0.6	0.03	0.4	0.01	0.3	0.01	6
7	4.2	4.01	2.6	1.24	1.5	0.33	1.1	0.15	0.7	0.05	0.5	0.02	0.3	0.01	7
8	4.8	5.14	3.0	1.59	1.7	0.42	1.3	0.20	0.8	0.06	0.5	0.02	0.3	0.01	8
9	5.4	6.39	3.3	1.97	1.9	0.52	1.4	0.25	0.9	0.07	0.6	0.03	0.4	0.01	9
10	6.0	7.76	3.7	2.40	2.1	0.63	1.6	0.30	1.0	0.09	0.7	0.04	0.4	0.01	10
11	6.6	9.26	4.1	2.86	2.4	0.75	1.7	0.36	1.1	0.11	0.7	0.04	0.5	0.02	11
12	7.2	10.88	4.4	3.36	2.6	0.89	1.9	0.42	1.1	0.12	0.8	0.05	0.5	0.02	12
14	8.4	14.48	5.2	4.47	3.0	1.18	2.2	0.56	1.3	0.16	0.9	0.07	0.6	0.02	14
16	9.6	18.54	5.9	5.73	3.4	1.51	2.5	0.71	1.5	0.21	1.1	0.09	0.7	0.03	16
18	10.8	23.06	6.7	7.12	3.9	1.88	2.8	0.89	1.7	0.26	1.2	0.11	0.8	0.04	18
20	12.0	28.03	7.4	8.66	4.3	2.28	3.1	1.08	1.9	0.32	1.3	0.13	0.9	0.05	20
22	13.2	33.44	8.2	10.33	4.7	2.72	3.5	1.28	2.1	0.38	1.5	0.16	1.0	0.06	22
24	14.4	39.28	8.9	12.13	5.1	3.19	3.8	1.51	2.3	0.45	1.6	0.19	1.0	0.07	24
26	15.6	45.56	9.6	14.07	5.6	3.71	4.1	1.75	2.5	0.52	1.7	0.22	1.1	0.08	26
28	16.8	52.26	10.4	16.14	6.0	4.25	4.4	2.01	2.7	0.60	1.9	0.25	1.2	0.09	28
30			11.1	18.34	6.4	4.83	4.7	2.28	2.9	0.68	2.0	0.28	1.3	0.10	30
35			13.0	24.40	7.5	6.43	5.5	3.03	3.3	0.90	2.3	0.38	1.5	0.13	35
40			14.8	31.25	8.6	8.23	6.3	3.89	3.8	1.15	2.7	0.49	1.7	0.17	40
45			16.7	38.87	9.6	10.23	7.1	4.83	4.3	1.43	3.0	0.60	2.0	0.21	45
50					10.7	12.44	7.9	5.88	4.8	1.74	3.3	0.73	2.2	0.25	50
55					11.8	14.84	8.7	7.01	5.3	2.08	3.7	0.88	2.4	0.30	55
60					12.9	17.44	9.4	8.24	5.7	2.44	4.0	1.03	2.6	0.36	60
65					13.9	20.22	10.2	9.55	6.2	2.83	4.4	1.19	2.8	0.41	65
70					15.0	23.20	11.0	10.96	6.7	3.25	4.7	1.37	3.0	0.48	70
75					16.1	26.36	11.8	12.45	7.2	3.69	5.0	1.55	3.3	0.54	75
80							12.6	14.03	7.6	4.16	5.4	1.75	3.5	0.61	80
85							13.4	15.70	8.1	4.65	5.7	1.96	3.7	0.68	85
90							14.2	17.45	8.6	5.17	6.0	2.18	3.9	0.76	90
95							15.0	19.29	9.1	5.72	6.4	2.41	4.1	0.84	95
100							15.7	21.21	9.5	6.29	6.7	2.65	4.3	0.92	100
110									10.5	7.50	7.4	3.16	4.8	1.10	110
120									11.5	8.81	8.0	3.71	5.2	1.29	120
130									12.4	10.22	8.7	4.30	5.6	1.50	130
140									13.4	11.73	9.4	4.94	6.1	1.72	140
150									14.3	13.32	10.0	5.61	6.5	1.95	150
160									15.3	15.02	10.7	6.32	6.9	2.20	160
170									16.2	16.80	11.4	7.08	7.4	2.46	170
180											12.0	7.87	7.8	2.73	180
190											12.7	8.69	8.2	3.02	190
200											13.4	9.56	8.7	3.32	200
225											15.1	11.89	9.8	4.13	225
250											16.7	14.45	10.8	5.02	250
275													11.9	5.99	275
300													13.0	7.04	300
325													14.1	8.16	325
350													15.2	9.37	350
375													16.3	10.64	375
400															400
425															425
450															450

Table C2 Frictional Loss, psi / 100 ft, of PVC Plastic Pipe - Class 200

Notes: Hazen Williams Coefficient (C) = 150, a = Inside area, OD = outside diameter, ID = inside diameter, use caution with vel. over 5 ft /sec.

Size (in)	1.00		1.25		1.50		2.00		2.50		3.00		3.50		4.00		
a (sq in)	1.11		1.77		2.32		3.63		5.31		7.87		10.29		13.02		
OD (in)	1.32		1.66		1.90		2.38		2.88		3.50		4.00		4.50		
ID (in)	1.19		1.50		1.72		2.15		2.60		3.17		3.62		4.07		
FLOW gal/min	velocity ft/s	loss psi	velocity ft/s	loss psi	velocity ft/s	loss psi	velocity ft/s	loss psi	velocity ft/s	loss psi	velocity ft/s	loss psi	velocity ft/s	loss psi	velocity ft/s	loss psi	FLOW gal/min
1	0.29	0.02	0.18	0.01	0.14	0.00											1
2	0.58	0.07	0.36	0.02	0.28	0.01	0.18	0.00									2
3	0.87	0.14	0.54	0.04	0.41	0.02	0.27	0.01	0.18	0.00							3
4	1.15	0.24	0.72	0.08	0.55	0.04	0.35	0.01	0.24	0.01							4
5	1.44	0.36	0.90	0.12	0.69	0.06	0.44	0.02	0.30	0.01							5
6	1.73	0.51	1.09	0.16	0.83	0.08	0.53	0.03	0.36	0.01	0.24	0.00					6
7	2.02	0.67	1.27	0.22	0.97	0.11	0.62	0.04	0.42	0.01	0.28	0.01					7
8	2.31	0.86	1.45	0.28	1.10	0.14	0.71	0.05	0.48	0.02	0.33	0.01					8
9	2.60	1.07	1.63	0.34	1.24	0.18	0.80	0.06	0.54	0.02	0.37	0.01	0.28	0.00			9
10	2.89	1.30	1.81	0.42	1.38	0.22	0.88	0.07	0.60	0.03	0.41	0.01	0.31	0.01			10
11	3.17	1.56	1.99	0.50	1.52	0.26	0.97	0.09	0.66	0.03	0.45	0.01	0.34	0.01			11
12	3.46	1.83	2.17	0.59	1.65	0.30	1.06	0.10	0.72	0.04	0.49	0.02	0.37	0.01	0.30	0.00	12
14	4.04	2.43	2.53	0.78	1.93	0.40	1.24	0.14	0.84	0.05	0.57	0.02	0.44	0.01	0.34	0.01	14
16	4.62	3.11	2.89	1.00	2.21	0.52	1.41	0.17	0.96	0.07	0.65	0.03	0.50	0.01	0.39	0.01	16
18	5.19	3.87	3.26	1.24	2.48	0.64	1.59	0.22	1.09	0.09	0.73	0.03	0.56	0.02	0.44	0.01	18
20	5.77	4.71	3.62	1.51	2.76	0.78	1.77	0.26	1.21	0.10	0.81	0.04	0.62	0.02	0.49	0.01	20
22	6.35	5.61	3.98	1.80	3.03	0.93	1.94	0.32	1.33	0.12	0.90	0.05	0.68	0.02	0.54	0.01	22
24	6.93	6.60	4.34	2.12	3.31	1.09	2.12	0.37	1.45	0.15	0.98	0.06	0.75	0.03	0.59	0.02	24
26	7.50	7.65	4.70	2.45	3.59	1.27	2.30	0.43	1.57	0.17	1.06	0.07	0.81	0.03	0.64	0.02	26
28	8.08	8.78	5.06	2.81	3.86	1.46	2.47	0.49	1.69	0.19	1.14	0.07	0.87	0.04	0.69	0.02	28
30	8.66	9.97	5.43	3.20	4.14	1.65	2.65	0.56	1.81	0.22	1.22	0.08	0.93	0.04	0.74	0.02	30
35	10.10	13.27	6.33	4.25	4.83	2.20	3.09	0.74	2.11	0.29	1.42	0.11	1.09	0.06	0.86	0.03	35
40	11.54	16.99	7.23	5.45	5.52	2.82	3.53	0.95	2.41	0.38	1.63	0.14	1.25	0.08	0.98	0.04	40
45	12.99	21.13	8.14	6.78	6.21	3.50	3.98	1.19	2.71	0.47	1.83	0.18	1.40	0.09	1.11	0.05	45
50	14.43	25.68	9.04	8.24	6.90	4.26	4.42	1.44	3.02	0.57	2.04	0.22	1.56	0.11	1.23	0.06	50
55			9.95	9.83	7.59	5.08	4.86	1.72	3.32	0.68	2.24	0.26	1.71	0.14	1.35	0.08	55
60			10.85	11.55	8.27	5.97	5.30	2.02	3.62	0.80	2.44	0.31	1.87	0.16	1.48	0.09	60
65			11.76	13.39	8.96	6.92	5.74	2.34	3.92	0.93	2.65	0.36	2.02	0.19	1.60	0.10	65
70			12.66	15.36	9.65	7.94	6.18	2.69	4.22	1.06	2.85	0.41	2.18	0.21	1.72	0.12	70
75			13.56	17.45	10.34	9.03	6.63	3.05	4.52	1.21	3.05	0.46	2.34	0.24	1.85	0.14	75
80			14.47	19.67	11.03	10.17	7.07	3.44	4.82	1.36	3.26	0.52	2.49	0.27	1.97	0.15	80
85					11.72	11.38	7.51	3.85	5.13	1.52	3.46	0.58	2.65	0.30	2.09	0.17	85
90					12.41	12.65	7.95	4.28	5.43	1.69	3.66	0.65	2.80	0.34	2.21	0.19	90
95					13.10	13.98	8.39	4.73	5.73	1.87	3.87	0.72	2.96	0.37	2.34	0.21	95
100					13.79	15.38	8.83	5.20	6.03	2.06	4.07	0.79	3.11	0.41	2.46	0.23	100
110							9.72	6.21	6.63	2.45	4.48	0.94	3.42	0.49	2.71	0.28	110
120							10.60	7.29	7.24	2.88	4.88	1.11	3.74	0.58	2.95	0.33	120
130							11.48	8.46	7.84	3.34	5.29	1.28	4.05	0.67	3.20	0.38	130
140							12.37	9.70	8.44	3.83	5.70	1.47	4.36	0.77	3.44	0.43	140
150							13.25	11.03	9.05	4.36	6.11	1.67	4.67	0.87	3.69	0.49	150
160							14.14	12.43	9.65	4.91	6.51	1.89	4.98	0.98	3.94	0.55	160
170									10.25	5.49	6.92	2.11	5.29	1.10	4.18	0.62	170
180									10.86	6.10	7.33	2.35	5.60	1.22	4.43	0.69	180
190									11.46	6.75	7.73	2.59	5.92	1.35	4.68	0.76	190
200									12.06	7.42	8.14	2.85	6.23	1.49	4.92	0.84	200
225									13.57	9.23	9.16	3.55	7.01	1.85	5.54	1.04	225
250											10.18	4.31	7.78	2.25	6.15	1.27	250
275											11.19	5.14	8.56	2.68	6.77	1.51	275
300											12.21	6.04	9.34	3.15	7.38	1.78	300
325											13.23	7.01	10.12	3.65	8.00	2.06	325
350											14.25	8.04	10.90	4.19	8.61	2.36	350
375													11.68	4.76	9.23	2.68	375
400													12.45	5.36	9.84	3.02	400
425													13.23	6.00	10.46	3.38	425
450													14.01	6.67	11.07	3.76	450
475													14.79	7.37	11.69	4.16	475
500															12.30	4.57	500
550															13.53	5.45	550
600															14.76	6.41	600
650																	650